TECHNICAL MANUAL

Field and Depot Maintenance

COORDINATE DATA SET AN/TSQ-36 AND COORDINATE DATA SET GROUP OA-1425A/FSG-1

Return for Educational Development Branch
MOS Library
Bldg 401
Fort

TM 11-5840-219-35
CHANGES No. 2

HEADQUARTERS,
DEPARTMENT OF THE ARMY
WASHINGTON 25, D. C., *9 June 1960*

TM 11-5840-219-35, 27 April 1959, is changed as indicated so that the manual also applies to the following equipment:

Nomenclature	*Order No.*
Coordinate Data Set Group OA-1425A/FSG-1.	644-PM-58-54-54

The title of the manual is changed as indicated above.

Note. The parenthetical reference to previous Changes (example: "page 1 of C 1") indicates that pertinent material was published in that Changes.

Add the following note in the places listed below:

Note. The digits referred to as aux 11 and aux 12 are called state of alert 1 and state of alert 2, respectively, in all AN/MSQ-18 system manuals.

Page 52, chapter 5, below heading.
Page 94, chapter 7, below heading.
Page 142, chapter 8, below heading.

Add the following note to the figures listed below.

NOTE:
IN OA-1425A/FSG-1, OC-CDG/TAC SWITCH S60 MUST REMAIN IN THE CDG/TAC POSITION.

Page 27, figure 9.
Page 95, figure 43, as note 4.
Page 102, figure 49.
Page 104, figure 51.
Page 141, figure 81, as note 6.
Page 328, figure 163, as note 13.
Page 346, figure 203, as note 6.

Add the following note to the figures listed below:

NOTE:
IN AMPLIFIER SYNCHRONIZER UNIT AM-2450/FSG-1, OC-CDG/TAC SWITCH S1 MUST REMAIN IN THE CDG/TAC POSITION.

Page 29, figure 11.
Page 64, figure 28, as note 4.
Page 143, figure 83.
Page 159, figure 101, as note 4.
Page 160, figure 102.
Page 193, figure 131, as note 6.
Page 346, figure 205, as note 7.

Add the following note to the figures listed below:

NOTE:
IN RECEIVER UNIT R-975/FSG-1, THE GROUND-SLANT SWITCHES MUST REMAIN IN THE GROUND POSITION.

Page 33, figure 12.
Page 66, figure 30, as note 4.
Page 167, figure 108, as note 4.
Page 193, figure 131, as note 7.
Page 331, figure 172, as note 12.
Page 346, figure 207, as note 8.

Add the following note to the figures listed below:

NOTE:
AUXILIARY DIGITS 11 AND 12 ARE NOT USED IN OA-1425A/FSG-1.

Page 61, figure 26, as note 4.
Page 66, figure 30, as note 5.
Page 128, figure 69.
Page 129, figure 70, as note 4.
Page 141, figure 81, as note 7.
Figure 82.
Page 167, figure 108, as note 5.
Page 168, figure 110.
Page 193, figure 131, as note 8.
Figure 132, as note 1.
Page 328, figure 163, as note 14.
Page 331, figure 172, as note 13.
Page 346, figure 204, as note 6.
Figure 207, as note 9.

Add the following note to the figures listed below:

NOTE:

SOME EQUIPMENTS ARE SHIPPED WITH TUBE TYPE 6336A IN PLACE OF TYPE 6336.

Page 73, figure 35.
Page 74, figure 36.
Page 334, figure 184, as note 4.

Add the following note to the figures listed below:

NOTE:

THE INPUT LINE FREQUENCY IS 390 TO 410 CYCLES IN THE OA–1425A/FSG–1.

Page 71, figure 33.
Page 72, figure 34.
Page 78, figure 40, as note 1.
Page 315, figure 158.

Add the following note to the figures listed below:

NOTE:

PLUG P18 IS DESIGNATED P1 IN ALL AN/MSQ–18 SYSTEM MANUALS.

Page 328, figure 162.
Figure 163, as note 15.
Page 331, figure 170, as note 17.
Figure 172, as note 15.
Figure 173, as note 7.
Page 333, figure 179, as note 5.
Page 346, figure 204, as note 7.
Figure 206, as note 6.
Figure 207, as note 12.

Page 3. Add the following note below the title of chapter 1:

Note. Coordinate Data Set AN/TSQ–36 and Coordinate Data Set Group OA–1425A/FSG–1 are similar. Information in this manual applies to both unless otherwise specified.

Make the following changes in paragraph 1:

Subparagraph *a*, line 4. After "AN/TSQ–36 (fig. 1)," add: and Coordinate Data Set OA–1425A/FSG–1 (fig. 1.1).

Subparagraph *b*. Delete subparagraph *b* and substitute:

b. Coordinate Data Set AN/TSQ–36 is used in Air Defense System AN/MSQ–18. For details regarding the application of this equipment, refer to TM 11–5895–262–25.

b.1. (Added) Coordinate Data Set OA–1425A/FSG–1 is used in the Fire Unit Integration Facility Subsystem (FUIF) of Antiaircraft Defense System AN/FSG–1. For details regarding the application of this equipment, refer to the literature covering Antiaircraft Defense System AN/FSG–1, Fire Unit Integration Facility (FUIF) Subsystem.

Page 4, figure 2. Add the following note:

NOTE:

AUXILIARY DIGITS 11 AND 12 ARE NOT USED IN OA–1425A/FSG–1.

Page 5, paragraph 4*l*, line 2. Delete "ordinarily" and substitute: In the AN/TSQ–36 only,

Paragraph 5. Make the following changes in subparagraph *a*:

Line 8. Change "Receiver sensitivity" to: Receiver sensitivity, Receiver Unit R–930/TSQ–36:

Line 11. Below "OC operation" add:
Receiver sensitivity, Receiver Unit R–975/FSG–1—0 to −40 dbm.

Last line, right-hand column. After "25° to 125° F" add: (−4° to 52° C).

Make the following changes in subparagraph *b*:

Line 2. After "Frequency," add: for AN/TSQ–36.

Below "Frequency," add: Frequency for OA–1425A/FSG–1—400 cycles, single phase.

Page 6, paragraph 6*d*. Make the following changes:

Change the heading to: **Ventilation (AN/TSQ–36).**

d.1. (Added) *Ventilation (OA–1425A/FSG–1).* Two axial fans at the top of the cabinet exhaust air from the cabinet, and one centrifugal blower above the power supplies acts as a hot-spot fan. Air intake is at the bottom of the cabinet through two fiber glass air filters.

Paragraph 7. Make the following changes:

Line 5. Add the following after the second sentence: The same common name assignments are used for Coordinate Data Set AN/TSQ–36 and Coordinate Data Set Group OA–1425A/FSG–1 because of their similarity. When it is necessary to differentiate between them, the nomenclature type designation will be used.

Subparagraph *a*. Make the following additions to the "Nomenclature" column:

Line 4. After "Electrical Test Panel SB–976/TSQ–36," add: and SB–976A/TSQ–36.

Line 8. After "Amplifier-Synchronizer Unit AM–2126/TSQ–36," add: AM–2450/FSG–1.

Line 10. After "Coordinate Data Receiver Unit R–930/TSQ–36," add: and R–975/FSG–1.

Line 17. After "Power Supply PP–2235/G," add: and PP–2517/G.

Subparagraph *b*. In the "Description" column, after "(fig. 1)," add: (and fig. 1.1).

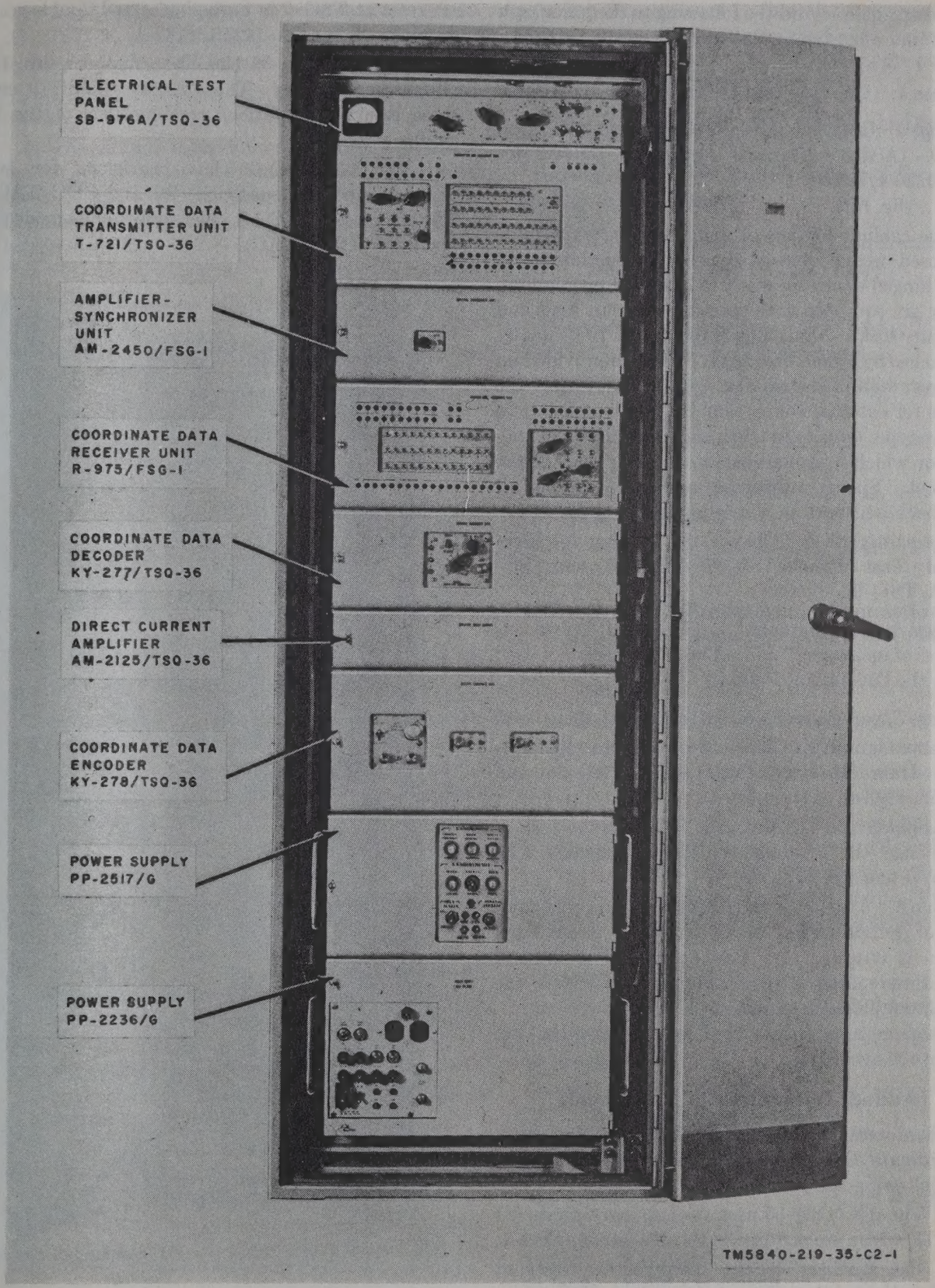

Figure 1.1. (Added) Coordinate Data Set Group OA–1425A/FSG–Z1.

Paragraph 8. Add the following to the paragraph title: and Coordinate Data Set Group OA–1425A/FSG–1.

Line 4. Change "(fig. 1)" to: (figs. 1 and 1.1).

Page 7, paragraph 8. Make the following changes:

a.1. (Added) *Electrical Equipment Cabinet for OA–1425A/FSG–1*

(fig. 5.1).

The cabinet consists of a magnesium angle frame enclosed within a riveted sheet magnesium skin. The hinged doors are made of extruded magnesium. They are equipped with sponge rubber air seals and a rotary lock. Mountings for standard 10 inches by 10 inches by 1 inch fiber glass filters are provided on the rear wall of the cabinet. Cables that carry the wires for external connection are terminated in two screw-type terminal strips and one pin-type connector which are mounted on the rear wall of the cabinet. Sponge rubber air seals are provided at the back and bottom wiring access openings.

Subparagraph *b*. Change the heading to: **Electrical Test Panels SB–976/TSQ–36 and SB–976A/TSQ–36.**

Page 8, subparagraph *d*, last line. After "various modes of operation," add: (The OC mode is not used with the OA–1425A/FSG–1.)

Page 8, paragraph 8. Make the following changes:

Subparagraph *e*. Change the heading to: **Coordinate Data Receiver Units R–930/TSQ–36 and R–975/FSG–1.**

Subparagraph *i*. Make the following changes:

Change the heading to: **Power Supplies PP–2235/G and PP–2517/G.**

Line 6. Delete the third sentence and substitute: Power Supply PP–2235/G has four unregulated filament outputs, and Power Supply PP–2517/G has three unregulated filament outputs and one regulated filament output.

Subparagraph *j*, line 9. Change "60-cycle" to: 60 or 400 cycles.

9.1 (Added) Differences in Equipments

Coordinate Data Set AN/TSQ–36 differs from Coordinate Data Set Group OA–1425A/FSG–1 in the following manner:

a. The AN/TSQ–36 uses two auxiliary digits (11 and 12) which are not used in the OA–1425A/FSG–1.

b. The auxiliary lockup packages are reset at TSG–0 in double-scale operation and TSG–10 in single-scale operation in the AN/TSQ–36. They are reset at TSG–0 in both single- and double-scale operation in the OA–1425A/FSG–1.

c. The AN/TSQ–36 has one common return for all auxiliary relays. The OA–1425A/FSG–1 uses three returns for various combinations of the 10 auxiliary relays.

d. The AN/TSQ–36 has provisions for two different modes of operation (OC and CDG/TAC). The OA–1425A/FSG–1 has only one mode of operation (CDG/TAC).

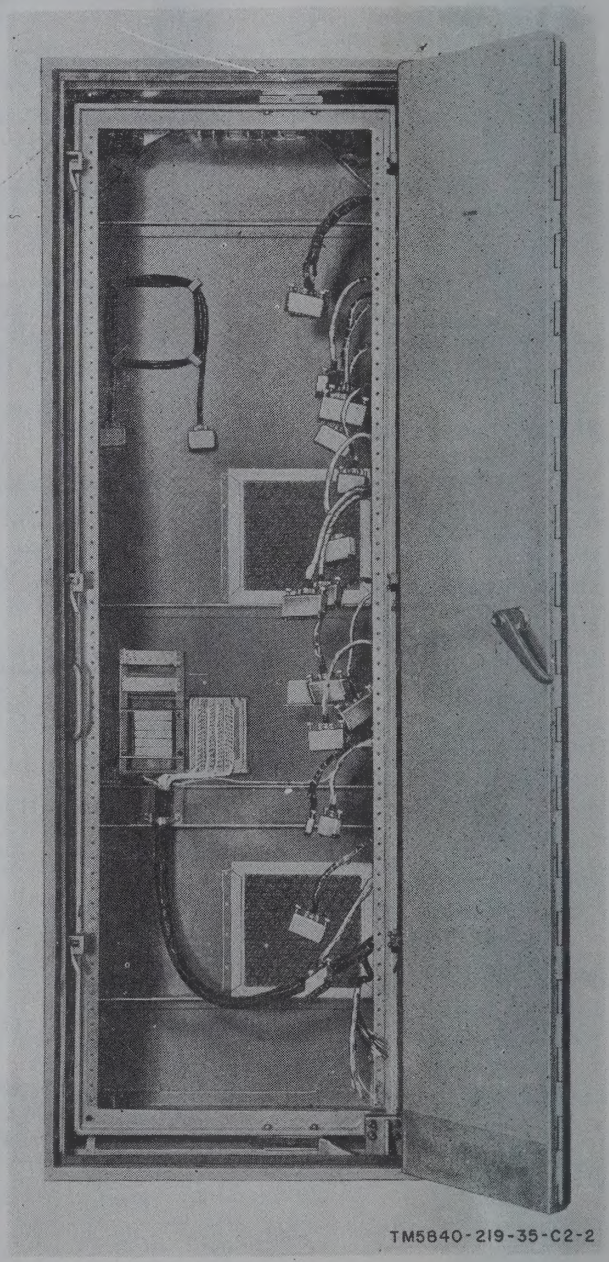

Figure 5.1. (Added) Electrical equipment cabinet for Coordinate Data Set Group OA–1425A/FSG–1.

e. A 60-cycle ac power supply is used in the AN/TSQ–36 and a 400-cycle power supply is used in the OA–1425A/FSG–1.

f. The cabinet differences are shown in figures 5 and 5.1.

g. The units that are not common to both equipments are listed in the chart below. The units listed in the opposing columns perform identical functions although none of the units listed are interchangeable.

Coordinate Data Set AN/TSQ–36	Coordinate Data Set Group OA–1425A/FSG–1
Electrical Test Panel SB–976/TSQ–36.	Electrical Test Panel SB–976A/TSQ–36.
Amplifier-Synchronizer Unit AM–2126/TSQ–36.	Amplifier-Synchronizer Unit AM–2450/FSG–1.
Coordinate Data Receiver Unit R–930/TSQ–36.	Coordinate Data Receiver Unit R–975/FSG–1.
Power Supply PP–2235/G	Power Supply PP–2517/G

Page 9, paragraph 10. Add the following to the heading: AN/TSQ–36.

Paragraph 11. Change the heading to: AN/TSQ–36 Trailer Requirements.

11.1 (Added) OA–1425A/FSG–1 Housing Requirements

a. The ceiling must be high enough to permit the free flow of air from the exhaust fans in the cabinet top. Sufficient space must be allowed for ventilation at the back of the cabinet. Enough room must be left to facilitate repair work and for door swing. Dimensions of the cabinet and the door swing are given in figure 7.1.

b. The normal room air must be capable of maintaining the internal temperature within the range of 25° and 125° F.

c. An ac source, capable of furnishing 115 to 130 volts, 390 to 410 cycles, 620 watts, must be available. A system ground connection near the operating location of the cabinet is required.

Paragraph 14. Make the following changes:

Subparagraph *a*. Change the heading to: **General (AN/TSQ–36).**

a.1. (Added) *General (OA–1425A/FSG–1).* After the equipment is uncrated, make a thorough inspection for damage incurred during shipment. If the equipment has been damaged or is incomplete, refer to paragraph 2. Detailed instructions are given in *b* through *h* below. Before the rack within the cabinet can be swung on its top and bottom bearings, the six latches around the frame of the rack must be released. These latches are released by swinging each latch lever upward 90° toward the center of the cabinet. This withdraws the bolt that fastens the rack frame to the cabinet.

Page 11, paragraph 16. Make the following changes:

Change the heading to: Installation of Coordinate Data Set AN/TSQ–36.

16.1 (Added) Installation of Coordinate Data Set Group OA–1425A/FSG–1

(fig. 7.1)

Coordinate Data Set Group OA–1425A/FSG–1 is installed by factory trained personnel.

Page 13, paragraph 19 (page 1 of C 1). Make the following changes:

Change the heading to: Preliminary Connections for Coordinate Data Set AN/TSQ–36.

Subparagraph *b*. Add the following note at the end of subparagraph *b*:

Note. Plug P18 is designated P1 in all AN/MSQ–18 system manuals.

19.1 (Added) Preliminary Connections for Coordinate Data Set Group OA–1425A/FSG–1

(fig. 162.1)

a. Cabling. All units of the data set are interconnected by the internal cabling. Wires of the internal cables are terminated in connectors on one end which mate with connectors on the individual chassis and on the other end which connect to P18. Wires for connection to circuits external to the data set run from J18 and are terminated in four connectors (TB7) and two terminal strips (TB5 and TB6) which are mounted at the inside rear of the cabinet (fig. 7.1).

b. Cables. No cables for external connections are furnished with the data set. The recommended wire type and size for the various external circuits are listed below.

Terminal	*Circuit*	*Recommended wire (AWG)*
TB7–1–10	Auxiliary digits input	18
TB7–11–20	Auxiliary digits output	18
TB7–21	Receiver TSG 14	18
TB7–22	All data present	18
TB7–23	Receiver CP	18* shielded
TB7–24	Serial data	18
TB7–26	Auxiliary 1, 2, 8, 9, 10 return	18
TB7–27	Auxiliary 5, 6, 7, return	18
TB7–28	Auxiliary 3, 4 return	18
TB7–61	H coordinate input	18 triple shielded
TB7–62	X coordinate input	18 triple shielded

Terminal	*Circuit*	*Recommended wire (AWG)*
TB7–63	Y coordinate input	18 triple shielded
TB7–68	H coordinate output	18 triple shielded
TB7–69	X coordinate output	18 triple shielded
TB7–70	Y coordinate output	18 triple shielded
TB7–91, 92	Receiver line input	18 double shielded
TB7–97, 98	Transmitter line input	18 double shielded
TB5–1, 2	115 vac input	14
TB5–3	Cabinet ground	18
TB6–1	ACQ + reference	18 triple shielded
TB6–2	ACQ reference common	18 triple shielded
TB6–3	ACQ − reference	18 triple shielded
TB6–6	Comparator − reference	18 triple shielded
TB6–7	Comparator reference common	18 triple shielded
TB6–8	Comparator + reference	18 triple shielded

*This wire should be RG–122/U coaxial cable if the run is greater than 10 feet.

c. Terminals. Connections are made to the pins of the connectors of P18 as follows:

(1) Remove the pin to which the connection is to be made. A removal tool and instruction for its use are furnished with the associated equipment.

(2) Insert the wire to be connected into the pin. A crimping tool, which is used to crimp the pin to the wire, and instructions for its use are furnished with the associated equipment.

(3) Insert the pin into the proper hole in the plug and apply pressure until the pin snaps into place.

(4) Determine that the pin is properly seated by pulling lightly on the wire. The pin should remain in place.

d. Power and Ground Connections. Connect the 115-volt external primary source wires to terminals 1 and 2 of TB5. Connect power line protective ground (conduit or ground wire) to terminal 3 of TB5. Connect ground terminal E2 to the building or system ground.

Page 15, paragraph 23, "Technical manual" column. For "Oscilloscope AN/USM–81," add: TM 11–6625–219–12.

Table III, "Position" column, opposite CDG/TAC–OC control. After "equipment," add: in the AN/TSQ–36. In the OA–1425A/FSG–1, this switch must be set at CDG/TAC at all times.

Page 18, table IV. Make the following changes:

Step 7. In the "Unit" column, after "Amplifier-Synchronizer," add: Unit AM–2126/TSQ–36.

Add step 7.1 after step 7.

Step	Unit	Control	Function	Method of setting
7.1	Amplifier-Synchronizer Unit AM–2450/FSG–1 (fig. 11).	DATA ADJ (R17).	Determines the data slicing level.	Set the transmitter group TENS switch at 0, UNITS switch to 9, and AUX switches 1 and 3 and the PC switch to the up position. Set the EXT-LOCAL switch on the test panel to LOCAL. Connect the oscilloscope input to test point E3 on the amplifier synchronizer, and synchronize the oscilloscope at SYNCH test jack on the transmitter group panel. Adjust the DATA ADJ control so that the width of the *zero* of aux 2 is equal to the width of the *one* of aux 3.

Step 8. Make the following changes:

In the "Unit" column, after "Amplifier Synchronizer," add: Unit AM–2126/TSQ–36. Add step 8.1 after step 8:

Step	Unit	Control	Function	Method of setting
8.1	Amplifier-Synchronizer Unit AM–2450/FSG–1 (fig. 11).	READY ADJ (R13).	Determines the ready slicing level.	Connect the oscilloscope input to test point E4. With the TENS and UNITS switches set to *zero*, adjust the READY ADJ control to produce a sliced ready signal having a minimum width of 4 milliseconds.

Step 9. Make the following changes:

In the "Unit" column, after "Amplifier Synchronizer," add: Unit AM–2126/TSQ–36. Add step 9.1 after step 9.

Step	Unit	Control	Function	Method of setting
9.1	Amplifier-Synchronizer Unit AM–2450/FSG–1 (fig. 11).	THRES ADJ (R500).	Determines the AGC threshold level.	Determine the weakest signal strength to be received. If this cannot be determined, assume a minimum signal strength of —35 dbm by setting REC AT (db) switch at 12 and XMTR AT (db) switch to 3 (20 db). Attenuation is supplied by the 20-db pad in the test panel. Record the voltage observed at test point E5 with a vtvm (dc). Connect the vtvm to test point E12 and adjust THRES ADJ control to obtain the voltage as measured at test point E5.

Page 21, paragraph 26. Make the following changes:

Add the following to the heading: for AN/TSQ–36.

26.1 (Added) System Line Level Adjustments for OA–1425A/FSG–1

a. Basis for System Lineup. System lineup is required to assure the proper performance of the system. The lineup consists of two phases: adjustment of the transmitter to be sure that it is transmitting signals of the proper amplitude or power level to the line, and adjustment of the receiver to be sure that signals of the proper amplitude or power level are being fed to the receiving circuits.

b. Frequency of Lineup. It is impossible to set forth one method for determining the lineup schedules for all systems. These schedules must be determined by the performance of the specific system being maintained. Monthly and daily system lineups will indicate the need for adjusting lineup schedules.

c. Control of Lineup. To make any line level adjustments, permission must be obtained from Air Defense Command Post (ADCP). The ADCP will not allow any adjustments to be made to the equipment when it is in use. Adjustments will be allowed during scheduled maintenance periods.

d. Measurement and Adjustment of FUIF Receiver Input Level. The input level for the receiver is set so that the signal measured at REC LINE (TP4) on the test panel is −20 dbm ±5 db. The agc circuit in the amplifier synchronizer will compensate for line variations of ±5 db. Measurement and adjustment of the receiver line levels are made as follows:

(1) Connect a vtvm (ac) from test point REC LINE (TP4) and ground of the test panel (fig. 8).

(2) Turn the equipment on (par. 40). Have the operator at the distant terminal transmit a 1,500-cycle test tone (*e* below).

(3) Set the REC AT (db) control on the test panel for a meter reading of −20 dbm ±5 db.

e. Measurement and Adjustment of FUIF Transmitter Output Level. During normal operating conditions, the output level to the transmission line should be between 0 and +6 dbm. Be sure that the equipment is operating properly as indicated in table V. Make the test as follows:

(1) Connect a vtvm (ac) to terminals 1 and 2 of transformer T1 on the test panel (fig. 157).
(2) Turn the equipment on (par. 40).
(3) Set the XMTR AT (db) control, located on the test panel, at 0.
(4) On the transmitter unit, set the PC switch at test (down), the TENS switch at 0, and the UNITS switch at 4. Press the RECYC button. This will transmit a steady 1,500-cycle test tone to the distant receiver, located at terminal B.
(5) Adjust the XMTR AT (db) control for a reading as close to 0 dbm as possible.

***Caution:* Do not adjust the 1,500 ~ LEV control on the modulator. This is the oscillator feedback control, not an output level control.**

(6) Set the PC switch in its normal (up) position.

f. Alternate Method of Measuring and Adjusting Transmitter Power Output Level.

(1) Turn the equipment on (par. 40).
(2) On the transmitter unit, set the PC switch at test (down), the TENS switch to 0, and the UNITS switch at 4. Press the RECYC button.
(3) Set the meter switch on the test panel at the XMTR SIG LVL position. Note the reading on the test panel meter.
(4) Set the XMTR AT (db) control to the setting which gives a red-line meter reading.
(5) Set the PC switch at normal (up).

Page 25, figure 8. Change the figure caption to: **Electrical test panels SB–976/TSQ–36 and SB–976A/TSQ–36, controls.**

Paragraph 30. In the "Function" column, last line, after "(par. 107)," add: (cannot be used in the OA–1425A/FSG–1).

Page 28, paragraph 31. In the "Function" column, last line, after "manually," add: (cannot be used in the OA–1425A/FSG–1).

Page 29, figure 11. Change the figure caption to: **Amplifier-Synchronizer Units AM–2126/TSQ–36 and AM–2450/FSG–1, controls.**

Page 32, paragraph 32. In the "Function" column, last line, after "register," add: (not used in the OA–1425A/FSG–1).

Page 33, figure 12. Change the figure caption to: **Coordinate data receiver units R–930/TSQ–36 and R–975/FSG–1, controls.**

Page 37, paragraph 35. Delete the "Item" column and substitute:

Item	
PP–2235/G	PP–2517/G
+4.5 & −20V PWR ON lamp.	PWR ON lamp
2A FN AC INPUT +4.5 & −20V fuse.	2A AC INPUT +4.5 & −20V fuse.
1.5A FN AC INPUT LAMP & FIL fuse.	1.5A INPUT −70V & UNREG FIL fuse.
−20V 4A DC OUTPUT fuse.	−20V 5A DC OUTPUT fuse
+4.5V 3A DC OUTPUT fuse.	Same as PP–2235/G
+20V and −20V DC OUTPUT test jack.	Same as PP–2235/G
+4.5V DC OUTPUT and GRD test jacks.	Same as PP–2235/G
+4.5V & −20V SUP ON-OFF switch.	Same as PP–2235/G
LAMP SUP ADJ VOLTS control.	Same as PP–2235/G
LAMP SUP TEST test jack.	LAMP test jack

Page 40, paragraph 37*g*. Add the following to the heading: (*Not Used in OA–1425A/FSG–1*).

Page 41, figure 17. Make the following changes:

Change the output line from the RECEIVER GROUP block to: GROUND.

Add the following note:

NOTE:

REMOTE START RECEIVER PULSE, ACK REMOTE START RECEIVER PULSE, AND THE SLANT OUTPUT TO THE RECEIVER GROUP ARE NOT USED IN THE OA–1425A/FSG–1.

Page 42, paragraph 38*j*. After subparagraph title add: (*Not Used in The OA–1425A/FSG–1*).

Paragraph 38. Make the following changes:

Subparagraph *k*. Change the subparagraph heading to: **AN/TSQ–36 Ground Range Operation.**

Subparagraph *l*. Change the subparagraph heading to: **AN/TSQ–36 Slant Range Operation.**

l.1. (Added) *OA–1425A/FSG–1 Ground and Slant Range Operation.* The determination of ground or slant operation in the Fire Unit Integration Facility is determined by equipment external to the OA–1425A/FSG–1. The GROUND-SLANT switches must be placed in the GROUND position for all types of operation.

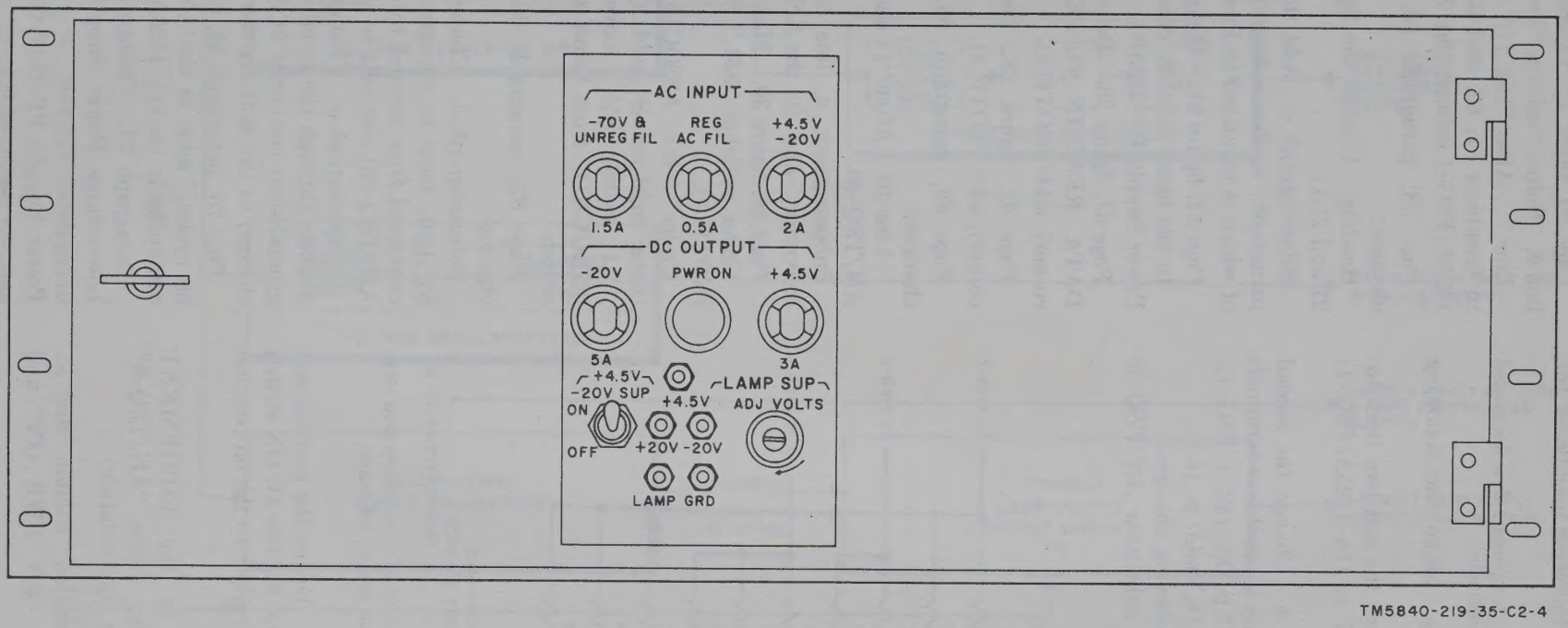

Figure 15.1. (Added) Power Supply PP–2517/G, controls.

Paragraph 39. Add the following note below the paragraph heading:

Note. Plug P18 referenced in this paragraph is designated P1 in all AN/MSQ–18 system manuals.

Page 44, paragraph 39*g*. Make the following changes:

Subparagraph *g*(1), change the last two lines to: through 10 of P18A (TB7 in OA–1425A/FSG–1) (figs. 162 and 162.1).

Subparagraph *g*(2), line 4. Change the second sentence to: These circuits are accessible at terminals 11 through 20 of P18A (TB7 in OA–1425A/FSG–1).

Line 18. After "see fig. 18," add: or 18.1.

Figure 18. Make the following changes:

Delete "*Auxiliary*" and substitute *AN/TSQ–36 auxiliary.*

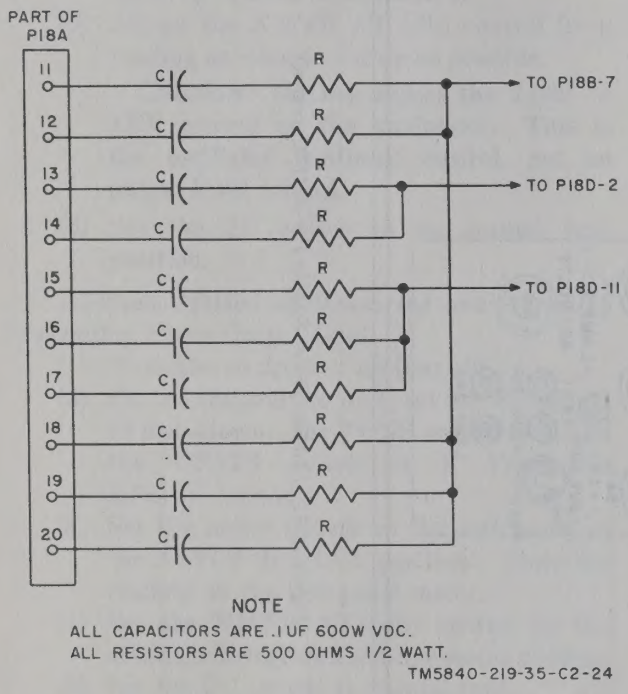

Figure 18.1 (Added) OA–1425A/FSG–1 auxiliary data relay contact arc suppressor circuit, schematic.

Page 45, paragraph 40*b*. Delete the heading and first sentence and substitute: Set the AC ON switch on the high-voltage power supply to the on position (up).

Page 47, figure 19. In the EQUIPMENT NOMENCLATURE block, delete "AN/TSQ–8" and substitute: (applicable nomenclature).

Page 49, table V, "Operation" column, step 1*c*. Delete "The +4.5V & −20V PWR ON" and substitute: The indicator.

Page 50, table V, "Operation" column, step 3*h*, line 6. Before "cabinet" insert: AN/TSQ–36.

Line 7. After "(fig. 7)," add: or the connections to terminals 61, 62, and 63 of TB7 on the OA–1425A/FSG–1 cabinet (fig. 7.1).

Page 53, paragraph 56. Make the following changes:

Heading. Change the figure reference to: (figs. 21 and 21.1).

Subparagraph *c*. Add the following to the subparagraph: in Power Supply PP–2235/G, and one of which is regulated in Power Supply PP–2517/G.

Page 54, figure 21. Make the following changes:

In the figure caption, change "power supply" to: Power Supply PP–2235/G.

Page 61, figure 26. Below the "2 AUXILIARY DATA READ-IN GATES" block (lower left corner), add: (NOTE 4).

Page 64, figure 28. Below "S1" (upper left corner), add: (NOTE 4).

Page 65, paragraph 66. Make the following changes:

Line 10. After "11 and 12 digits," add: in the AN/TSQ–36.

Subparagraph *a*, line 2. After "ground-slant converter," add: (in the AN/TSQ–36).

Page 66, figure 30. Make the following changes:

Under switches "S51," "S52," and "S53," add: (NOTE 4).

Under "TO ASSOCIATED EQUIPMENT" (lower right corner), add: (NOTE 5).

At switch S51, move the panel marking "GROUND" from below the switch to above the switch.

Page 67, paragraph 66. Make the following changes:

Subparagraph *a*. Change the last four lines to: by digit, (sent to the ground-slant converter and converted from ground to slant coordinates in the AN/TSQ–36) and sent to the shift register.

Subparagraph *c*. Change lines 3 and 4 to: passes directly through the serial adder (then through the ground-slant converter in the AN/TSQ–36 without change) to the shift register.

Page 70, paragraph 69, line 5. After "115 volts, 60 cycles," add: in the AN/TSQ–36 or 115 volts, 400 cycles in the OA–1425A/FSG–1.

Paragraph 71. Change the second sentence to: Low-voltage Power Supply PP–2235/G has four unregulated 6.4-volt ac outputs. Low-voltage Power Supply PP–2517/G has three unregulated and one regulated 6.4-volt ac outputs.

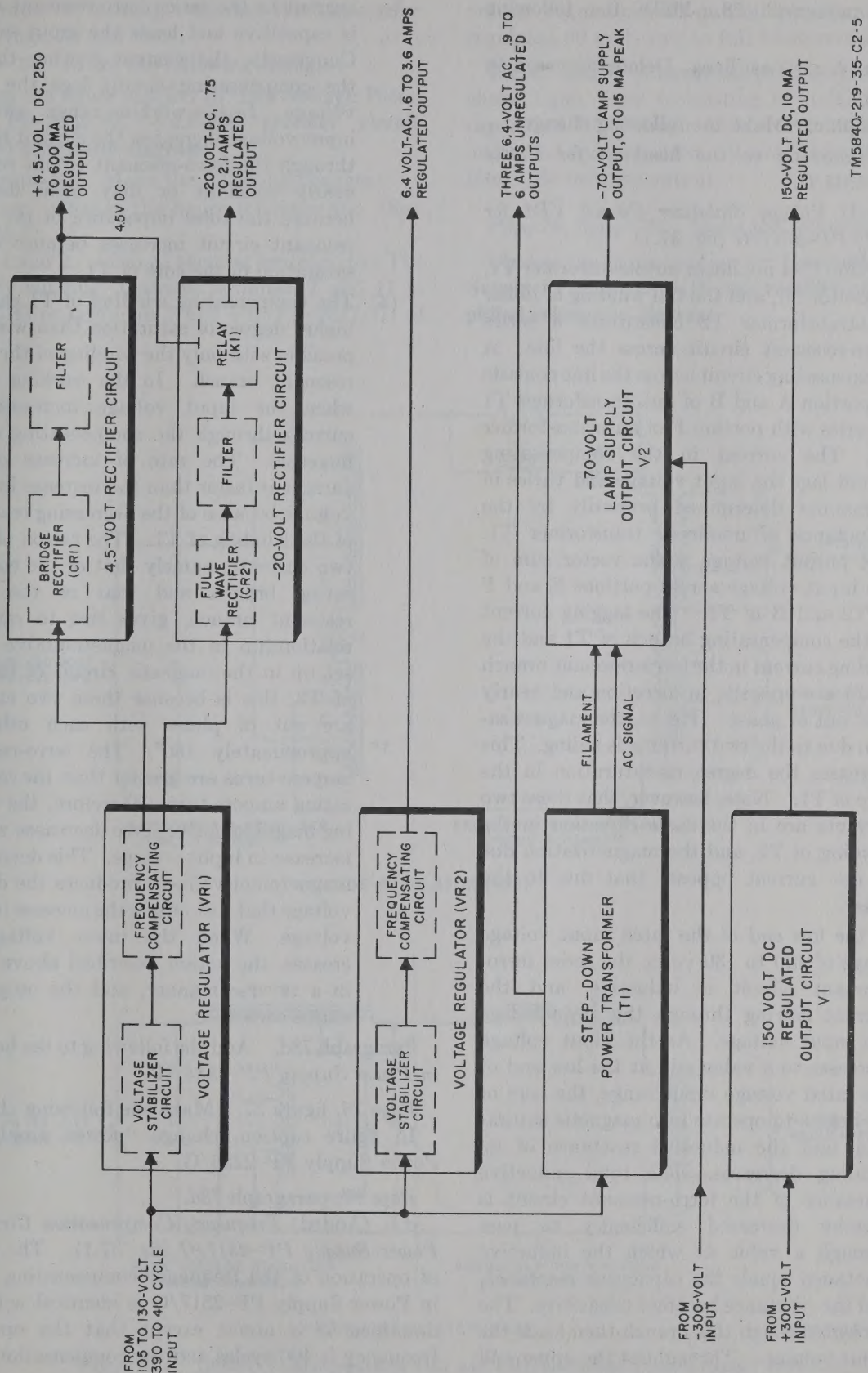
+4.5-VOLT DC, 250 TO 600 MA REGULATED OUTPUT
4.5V DC
-20 VOLT-DC, .75 TO 2.1 AMPS REGULATED OUTPUT
6.4 VOLT-AC, 1.6 TO 3.6 AMPS REGULATED OUTPUT
THREE 6.4-VOLT AC, .9 TO 6 AMPS UNREGULATED OUTPUTS
-70-VOLT LAMP SUPPLY OUTPUT, 0 TO 15 MA PEAK
150-VOLT DC, 10 MA REGULATED OUTPUT
TM5840-219-35-C2-5
BRIDGE RECTIFIER (CR1)
FILTER
4.5-VOLT RECTIFIER CIRCUIT
FULL WAVE RECTIFIER (CR2)
FILTER
RELAY (K1)
-20-VOLT RECTIFIER CIRCUIT
VOLTAGE STABILIZER CIRCUIT
FREQUENCY COMPENSATING CIRCUIT
VOLTAGE REGULATOR (VR1)
VOLTAGE STABILIZER CIRCUIT
FREQUENCY COMPENSATING CIRCUIT
VOLTAGE REGULATOR (VR2)
STEP-DOWN POWER TRANSFORMER (T1)
FILAMENT
AC SIGNAL
-70-VOLT LAMP SUPPLY OUTPUT CIRCUIT V2
150 VOLT DC REGULATED OUTPUT CIRCUIT V1
FROM 105 TO 130-VOLT 390 TO 410 CYCLE INPUT
FROM -300-VOLT INPUT
FROM +300-VOLT INPUT

Figure 21.1. (Added) Low-voltage power supply PP-2517/G, block diagram.

Page 75, paragraph 78. Make the following changes:

Subparagraph *a*. Last line. Delete "between 58 and 62 cycles."

Subparagraph *c*. Make the following changes:

Add the following to the heading: *for Power Supply PP–2235/G.*

c.1. (Added) *Voltage Stabilizer Circuit VR1 for Power Supply PP–2517/G* (fig. 37.1).

(1) Portion C of nonlinear autotransformer T1, capacitor C1, and the full winding of linear autotransformer T2 constitutes a series ferro-resonant circuit across the line. A compensating circuit across the line consists of portion A and B of autotransformer T1 in series with portion F of autotransformer T2. The current in the compensating circuit lags the input voltage and varies in a manner determined primarily by the inductance of nonlinear transformer T1. The output voltage is the vector sum of the input voltage across portions E and F of T2 and B of T1. The lagging current in the compensating branch of T1 and the leading current in the ferro-resonant branch of T1 are opposite in direction and nearly 180° out of phase. Hence, the magnetization due to the two currents is aiding. This increases the degree to saturation in the core of T1. Note, however, that these two currents are in the same direction in the winding of T2, and the magnetization due to one current opposes that due to the other.

(2) At the low end of the rated input voltage range of 105 to 130 volts, the series ferro-resonant circuit is inductive, and the current flowing through this branch lags the input voltage. As the input voltage increases to a value still at the low end of the rated voltage input range, the core of T1 begins to operate into magnetic saturation, and the inductive reactance of its winding decreases. The total inductive reactance of the ferro-resonant circuit is thereby decreased sufficiently to pass through a value at which the inductive reactance equals the capacitive reactance, and the reactance becomes capacitive. The current through this branch then leads the input voltage. Throughout the upper end of the rated input voltage range, the current in the series ferro-resonant circuit is capacitive and leads the input voltage. Conversely, the current flowing through the compensating circuit lags the input voltage. In the working range, when the input voltage increases, the current flowing through the ferro-resonant circuit remains nearly constant or may even decrease because the total impedance of the ferro-resonant circuit increases because of the saturation of the core of T1.

(3) The compensating winding of T1 causes a higher degree of saturation than would be possible with only the winding of the ferro-resonant branch. In the working range, when the input voltage increases, the current through the compensating circuit increases. The rate of increase of this current is faster than the increase in input voltage because of the decreasing reactance of the winding of T1. The action of these two currents, namely that of the compensating branch and that of the ferro-resonant branch, gives rise to opposing relationship in the magnetomotive forces set up in the magnetic circuit of the core of T2; this is because these two currents are out of phase with each other by approximately 180°. The ferro-resonant ampere-turns are greater than the compensating ampere-turns; therefore, the resulting magnetomotive force decreases with an increase in input voltage. This decrease in magnetomotive force produces the derived voltage that just offsets the increase in input voltage. When the input voltage decreases, the action described above works in a reverse manner, and the output remains constant.

Paragraph 78*d*. Add the following to the heading: *in Power Supply PP–2235*/G.

Page 76, figure 37. Make the following changes:

In figure caption, change "power supply" to: Power Supply PP–2235/G.

Page 77, paragraph 78*d*.

d.1. (Added) *Frequency Compensation Circuit in Power Supply PP–2517/G* (fig. 37.1). The theory of operation of the frequency-compensating circuit in Power Supply PP–2517/G is identical with that described in *d* above except that the operating frequency is 400 cycles and the compensation limits are from 390 to 410 cycles.

Paragraph 79, heading. Change the figure reference to: (figs. 38 and 38.1).

Figure 38. Make the following changes:

Change the figure caption to: **Low-voltage Power Supply PP–2235/G, +4.5-volt rectifier circuit, simplified schematic diagram.**

Paragraph 80. Make the following changes:

Heading. Change the figure reference to: (figs. 39 and 39.1).

Lines 1 and 2. Change the first sentence to: The secondary winding (between terminals 7 and 11 in PP–2235/G or terminals 7 and 9 in PP–2517/G) of voltage regulator VR1 output transformer supplies regulated 50 volts rms to full wave rectifier CR2.

Lines 8 and 9. Change the third sentence to: The choke input filter (consisting of inductor L2 and capacitors C3 through C10 in PP–2235/G or inductor L2 and capacitors C2 and C3 in PP–2517/G) filters the rectified output.

Page 78, figure 39. Make the following changes:

Change the figure caption to: **Low-voltage Power Supply PP–2235/G, −20-volt rectifier circuit, simplified schematic diagram.**

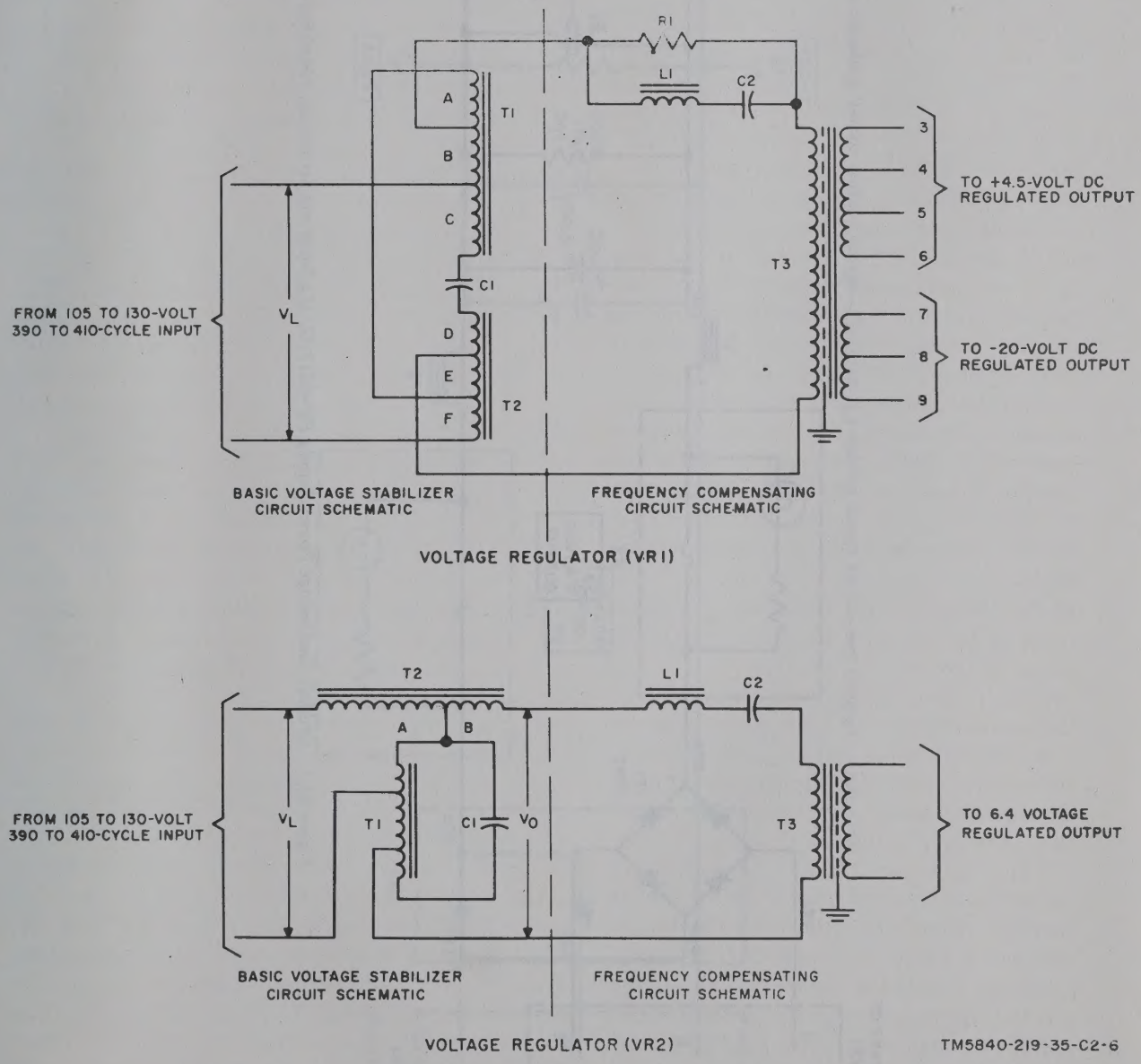

Figure 37.1. (Added) Voltage regulators VR1 and VR2, low-voltage Power Supply PP–2517/G.

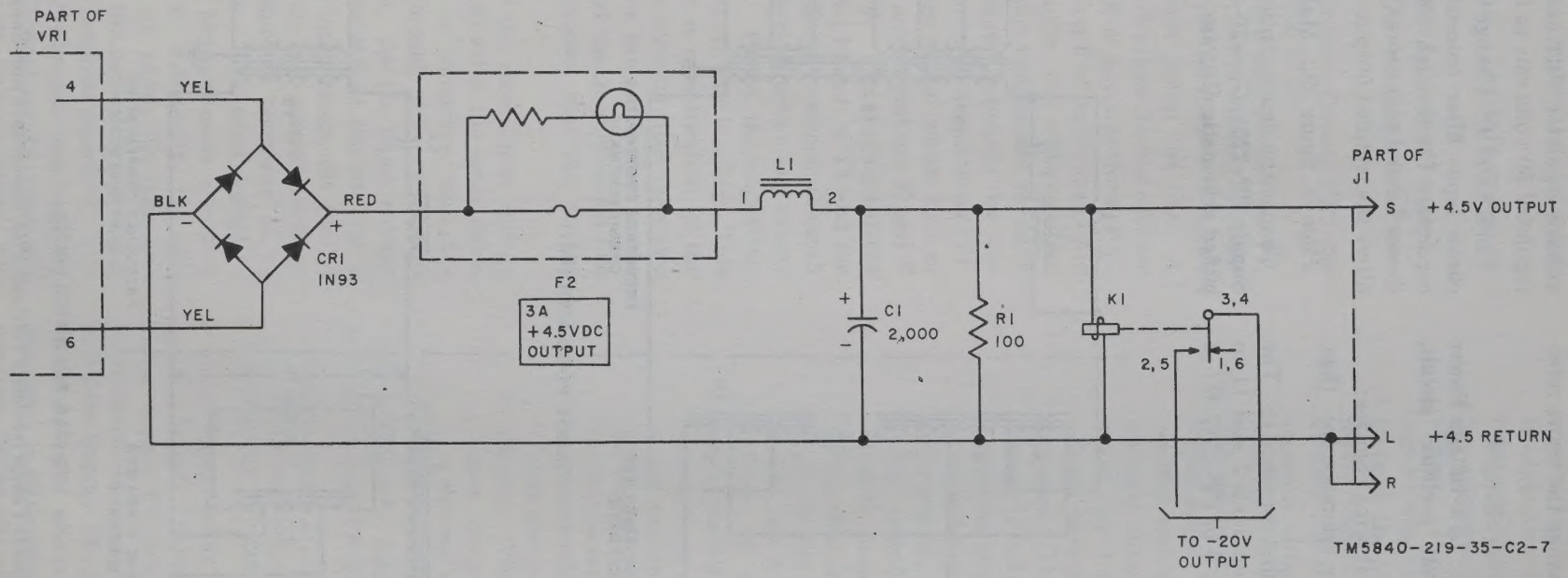

Figure 38.1 (Added) Low-voltage Power Supply PP-2517/G, M4.5-volt rectifier circuit, simplified schematic diagram.

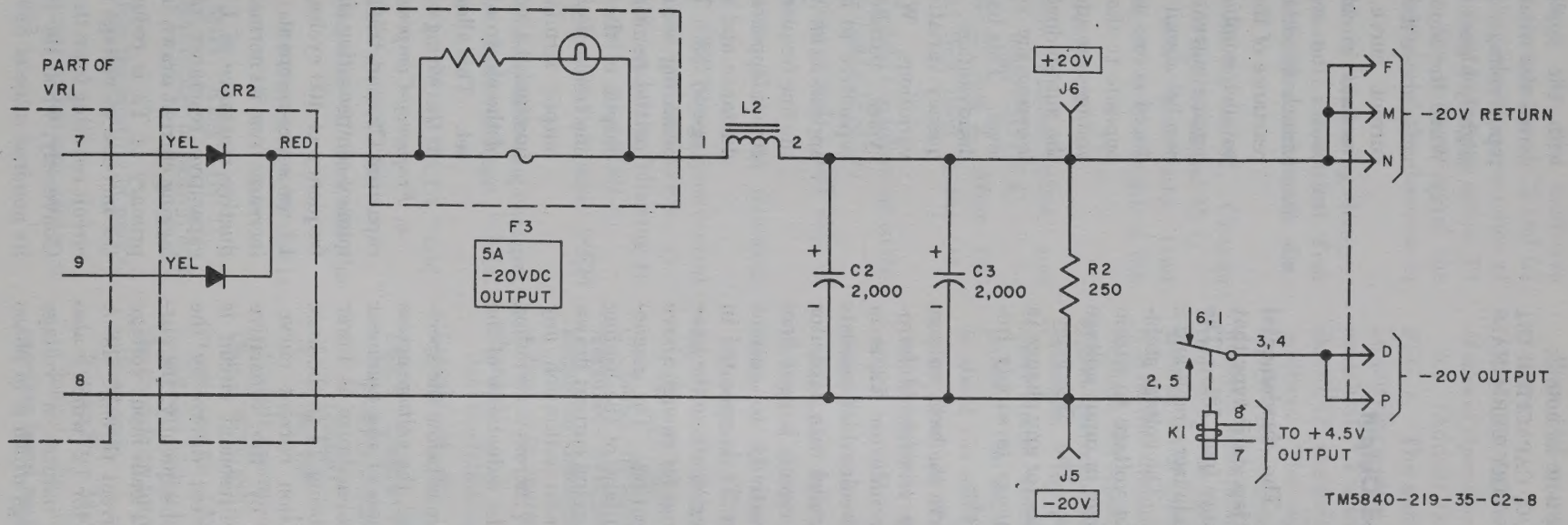

Figure 39.1. (Added) Low-voltage Power Supply PP-2517/G, —20-volt rectifier circuit, simpliqed schematic diagram.

Figure 40. Add the following note as note 2:

2. IN POWER SUPPLY PP-2517/G, CAPACITOR C11 IS CALLED C4 AND THE SECONDARY TERMINALS OF T1 ARE 13 AND 14.

Page 79, paragraph 83.

83.1 6.4-Volt Ac Regulated Output

(Added)

(fig. 37.1)

a. Voltage Regulator VR2. The fundamental circuit of voltage regulator VR2 is a static type that uses the principle of ferro-resonance (par. 78*b*). The regulator consists of a voltage stabilizer circuit and a frequency-compensating circuit. The voltage stabilizer circuit regulates the output voltage to within the limits required for any change in input voltage between 105 and 130 volts. The frequency-compensating circuit compensates for any change in output voltage caused by a change in supply frequency between 390 and 410 cycles.

b. Voltage Stabilizer Circuit. In the basic voltage stabilizer circuit employing the principle of ferro-resonance, portion A of linear inductor T2 is in series with the ferro-resonant circuit which consists of nonlinear inductor T1 in parallel with capacitor C1. A parallel ferro-resonant circuit is used here because it displays high sensitivity to current changes. Nonlinear inductance T1 is operated in the circuit near the saturated region above the knee of its magnetization curve, but not far enough above to cause excessive losses and heating. The magnetizing current in T2 is the resultant of the leading current drawn by C1 and the lagging current drawn by T1. Since T1 is operating near saturation, any slight change in input voltage, V_L, across the winding produces a marked change in the inductance of the coil.

(1) When the input voltage is below the specified requirement of VR2, the voltage across the parallel combination of the nonlinear inductance and the capacitance is lower than that required to bring T1 to the knee of the ac magnetization current curve. The current drawn by the capacitive branch of the parallel-resonant circuit is greater than the current drawn by the inductive branch. Consequently, the current in portion A of T2 leads input voltage V_L. This leading current through the A winding of linear inductor T2 (which is also an autotransformer) induces a voltage across the A–B windings which is in phase with the applied voltage. The voltage across the winding adds vectorially to the input voltage, producing at V_O a voltage slightly higher than applied voltage V_L.

(2) When the input voltage is increased to a value above the knee of the ac magnetizing current curve, the voltage across the resonant circuit increases slightly; this causes the reactance of the inductive branch to change more rapidly than the reactance of the capacitance branch. The parallel combination therefore, draws a lagging current. The net resultant of the parallel circuit causes a voltage to be induced across autotransformer T2 which is opposite to the applied voltage. The two voltages are added algebraically (V_L minus the auto-induced voltage across T2), thus lowering the voltage at V_O to the desired level. This basic stabilizer circuit has one disadvantage; it is sensitive to line frequency variations as well as to amplitude variations. When the line frequency is 410 cycles, parallel circuit T1–C1 appears capacitive to linear inductance T2, which appears as an increase of V_O to T3. When the line frequency is 390 cycles, the parallel circuit appears inductive to the linear inductance and results in a decrease in voltage to T3. Therefore, a frequency-compensating circuit is required to compensate for the resulting voltage change from the output of the stabilizer circuit when the line frequency varies. The voltage at the output terminals is 0.1 volt above the nominal 6.3 volts required for the heaters of the electron tubes in circuits of the data set. This allows for the small voltage drop in the wiring to the various units.

c. Frequency-Compensating Circuit. Inductor L1, capacitor C2, and transformer T3 constitute a frequency-compensating circuit. At the nominal input frequency of 400 cycles, capacitor C2 and inductor L1 are series-resonant. When the input frequency increases from its normal value of 410 cycles, the inductive reactance of L1 becomes greater than the capacitive reactance of C2. As a result of the lagging current drawn by T3, the voltage across the primary of T3 is reduced. This compensates for the increase in voltage out of the voltage stabilizer circuit resulting from the increase in input frequency. Conversely, when the input frequency drops below its nominal value of 390 cycles, the capacitive react-

ance of C2 becomes greater than the inductive reactance of L1, and the net reactance of C2 and L1 partially resonates with the inductive reactance of T3. This results in an increase in voltage across T3 and thus compensates for the voltage out of the voltage stabilizer circuit because of the decrease in input frequency.

Page 81, figure 42. Make the following changes:

Change the figure caption to: **Electrical Test Panel SB–976/TSQ–36, simplified schematic diagram.**

Page 82, paragraphs 88, 89, 90, and 91. Change all references to figure 42 to: figures 42 and 42.1.

Paragraph 88, line 12. After "pad," add: (and AT2 in the SB–976A/TSQ–36) to the input of the amplifier synchronizer.

Line 13. Delete "(receiver)."

Page 95, figure 43. Below switches "S60A" and "S60B" (left side of figure), add: (NOTE 4).

Page 96, paragraph 104*c*(2), line 2. After "OC mode of operation," add: (not used in the OA–1425A/FSG–1).

Page 101, paragraph 107*c*.Add the following to the heading: (*Not Used in OA–1425A/FSG–1*).

Page 102, figure 49. Below "S60B" (left side of figure) add: (SEE NOTE).

Page 104, paragraph 108. Make the following changes:

Subparagraph *a*, line 9. After "operations central (OC)," add: (not used in the OA–1425A/FSG–1).

Subparagraphs *c* and *d*. Add the following to the headings: (*Not Used in OA–1425A/FSG–1*).

Figure 51. Below switch "S60A," add: (SEE NOTE).

Page 120, figure 63. Make the following changes:

At the bottom of the figure change "(SEE NOTE)" to: (SEE NOTE 1).

After "READ IN AUX 11 AND 12 DATA," add: (SEE NOTE 2).

Change the word "NOTE" to: NOTES.

Designate the existing note as "1" and add the following:

2. AUXILIARY DIGITS 11 AND 12 ARE NOT USED IN OA–1425A/FSG–1.

Page 128, figure 69. After "READ-IN 11, 12 AUXILIARY DATA" (right center of figure), add: (SEE NOTE).

Page 129, figure 70. After the subtitle of part C, add: (SEE NOTE 4).

Page 139, figure 79. Below C5 (bottom center of figure), change 0.47 to: 0.047.

Page 142, paragraph 136*b*. Make the following changes:

Add the following heading to subparagraph *b*. *Modes of Operation, Receiver Unit R–930/TSQ–36.*

b.1. (Added) *Operation of Receiver Unit R–975/FSG–1.* The path of the input signal through the amplifying section is selected by the CDG/TAC–OC switch S1. For this application of the data set with the FUIF, the switch must remain in the CDG/TAC position. The signal goes through part of the CDG/TAC–OC switch and the pad to amplifier V1, where it is amplified and its level automatically controlled by the agc circuits. It then passes through another set of contacts of S1 to amplifier V2A, where it is further amplified. The output of V2A is passed through the separation filter where the 600-cps and 1,500-cps components of the signal are separated and processed. Each goes through a detector and a slicer circuit where it is converted to positive-going pulses. The duration of the positive-going pulses is about the same as the duration of the ac pulses received on the line. A portion of the output of the data detector is applied to agc amplifier V2B. The output of V2B is rectified and filtered and used to control the gain of V1.

Page 143, figure 83. In the upper left corner of the figure, delete the line going from the right-hand section of S1 (marked OC) to amplifier V2A.

Paragraph 137*b*. Add the following to the heading: (*Not Used in OA–1425A/FSG–1*).

Page 144, figure 84. Make the following changes:

Change the figure caption to: **Amplifier circuits of Amplifier Synchronizer Unit AM–2126/TSQ–36, simplified schematic.**

Page 148, paragraph 143. Make the following changes:

Add the following to the heading: in Receiver Unit R–930/TSQ–36.

143.1. Delay F/F Circuit in Receiver Unit R–975/FSG–1

(Added)

(fig. 89)

Circuit operation of the delay F/F in Receiver Unit R–975/FSG–1 is identical with that described in paragraph 143 except that capacitor C13 is paralleled with a 0.1-microfarad capacitor (C16) snd the time delay for turn-on of the delay F/F is about 2 milliseconds.

Figure 88. Make the following changes:

Change the figure caption to: **AN/TSQ–36 receiver input section, timing diagram.**

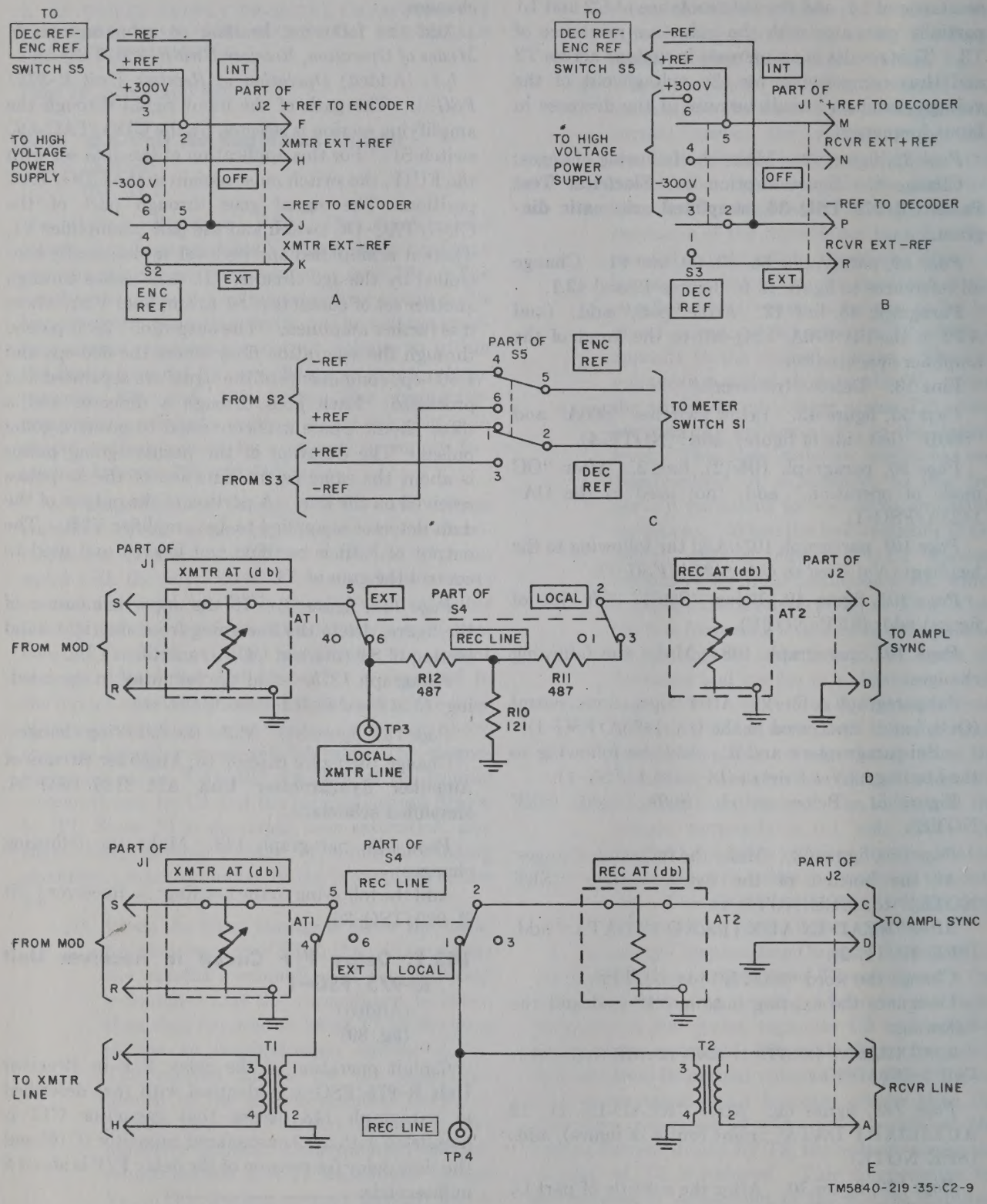

Figure 42.1. (Added) Electrical test panel SB-976A/TSQ-36, simplified schematic diagram.

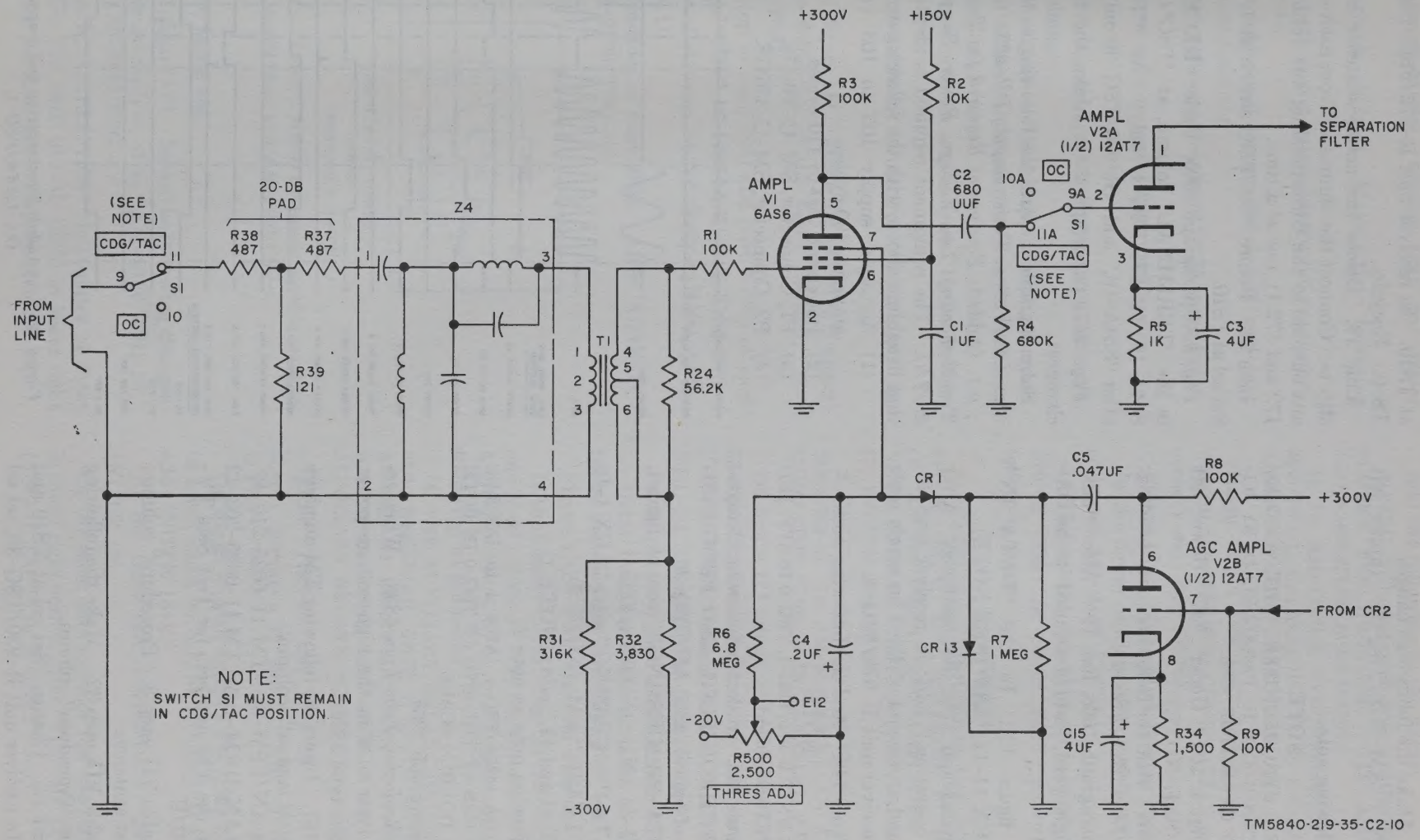

Figure 84.1. (Added) Amplifier circuits of amplifier synchronizer unit AM–2450/FSG–1, simplified schematic diagram.

Figure 89. Make the following changes:

Delete "UNIT AM–2126/TSQ–36" (upper left corner).

Add the following note:

NOTE:

IN AMPLIFIER SYNCHRONIZER UNIT AM–2450/FSG–1, CAPACITOR C13 IS PARALLELED BY 0.1-MICROFARAD CAPACITOR C16.

Page 160, figure 102. Under "OC" (lower left corner), add: (SEE NOTE).

Paragraph 159. Add the following to the heading: (*Not Used in OA–1425A/FSG–1*).

Page 167, paragraph 166*b*, line 19. After "auxiliary 11, 12 digit word," add: (not used in the OA–1425A/FSG–1).

Page 168, figure 110. In the "DATA IN" column at "AUX 11–12," add: (SEE NOTE).

Page 177, paragraph 176*a*, last sentence. After "single scale operation," add: in receiver unit R–930/TSQ–36 and at the end of TS–0 for single scale operation in receiver unit R–975/FSG–1.

Page 178, figure 118. Add the following note:

NOTE:

IN RECEIVER UNIT R–975/FSG–1, TSG–0 IS APPLIED TO BOTH INPUTS OF S54A.

Page 193, figure 132. Make the following changes:

After "SYNCHRONIZING AND PROGRAMMING" (top of figure), add: AN/TSQ–36.

After "DATA PROCESSING" (top of figure), add: AN/TSQ–36 AND OA–1425A/FSG–1

Below "DATA PROCESSING" after "AUX 1–10 LOCKUP RELEASE," add: (NOTE 2).

After "AUX 11 and 12," add: (NOTE 1).

Add the following note as note 2.

2. IN THE OA–1425A/FSG–1, AUX 1–10 LOCKUP RELEASE OCCURS AT THE END OF TSG–0 IN BOTH SINGLE AND DOUBLE SCALE.

Page 195, paragraph 196*b*.

c. (Added) *Replacing Tube Type 6336.* When replacing tube type 6336 in the high-voltage power supply, use tube type 6336A.

Paragraph 197. Insert the following TM numbers in the "*Technical manual*" column.

Oscilloscope AN/USM–81—TM 11–6625–219–12

Multimeter AN/URM–105—TM 11–6625–203–12

Interchange the TM numbers for Test Sets TV–7/U and TV–2/U.

Page 200, table VII, step 8, "Procedure" column. Delete the first sentence.

Page 231, table VII, step 32. Make the following changes in the "Procedure" column.

Lines 11 and 12. Change "Set sel at TS10 and recycle" to: In receiver unit R–930/TSQ–36, set sel at TS10. In receiver unit R–975/FSG–1 set sel at TS–0. Recycle.

Line 18. Delete the entire sentence and substitute: Connect the ohmmeter from each of the 10 aux outputs to the corresponding aux returns (figs. 172 and 172.1), one at a time.

Line 24. Before "Set TDC switch at 1," insert: Set sel at TS10.

Page 250, paragraph 200*b*. Under "RECEIVER," in the "TERMINAL" column, at "TSG–0," add: S54A–10 (R–975/FSG–1 only). At "TSG–10," after "S54A–10," add: (R–930/TSG–36 only).

Page 257, paragraph 208. Make the following changes:

Subparagraph *a*. Add the following to the heading: *Low-Voltage Power Supply PP–2235/G.*

a.1. (Added) *Equipment Required for Testing and Troubleshooting Low-Voltage Power Supply PP–2517/G.* The equipment required is identical with that listed in *a* above, with the following exceptions:

(1) Ac input supply 105 to 103 volts, 3.5 amperes, 400 cycles.
(2) Powerstat, 390 to 410 cycles.
(3) P1, Connector, SM–C–336478.
(4) P2, Connector, SM–C–336478.

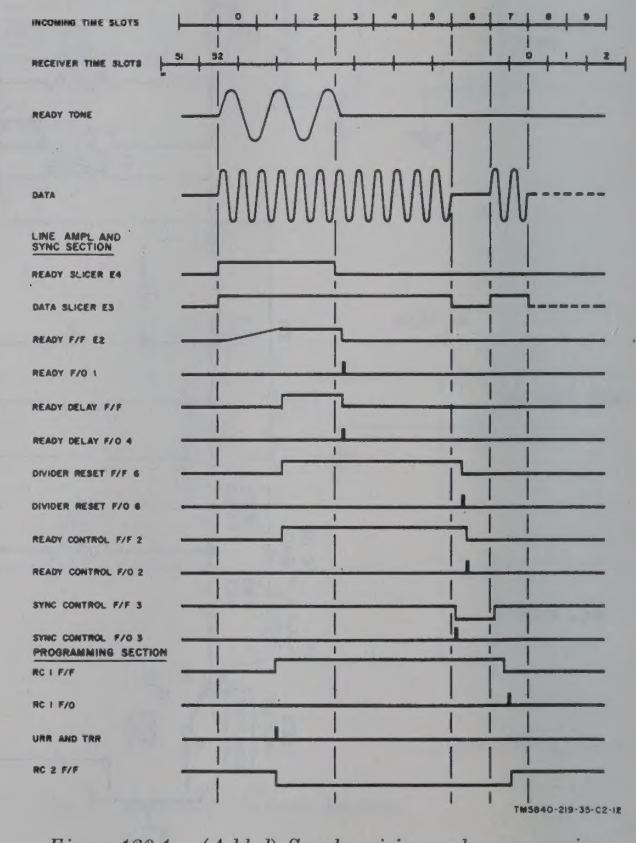

Figure 132.1. (Added) Synchronizing and programming, OA–1425A/FSG–1.

Subparagraph *b*(1)(*c*). Change "60" to: 60 or 400.

Subparagraph *b*(2)(*c*). Make the following changes:

In the chart, last column, above "*Max. ripple,*" add: 60 cycle.

Make an additional column titled: *400 cycle max ripple peak-to-peak*(*mv*).

In this new column across from "4.25 min," insert: 25.

In this new column across from "4.75, max, "insert: 20.

Page 257, paragraph 208b(3)(*c*). Make the following changes:

In the chart above "*Max. ripple*" add: 60 cycle.

Make an additional column titled: *400 cycle max ripple peak-to-peak* (*mv*).

In this new column across from "18.4 min," insert: 50.

In this new column across from "21.7 max," insert: 40.

Page 284, figure 141. Make the following changes:

Add the following to the figure caption: *and AM–2450/FSG–1.*

Part 1 (top of page 284) and part 3 (top of page 285) change "R40" to: R40 (AM–2126/TSQ–36).

Add the following above R40: R500 (AM–2450/FSG–1).

Part 4 (bottom of page 285). After "CMB–D," add: (AM–2126/TSQ–36).

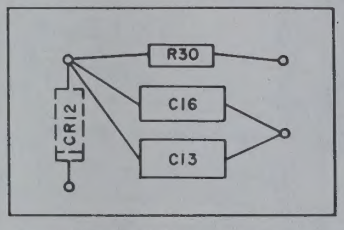

Figure 141.1. (Added) CMB–D component board in amplifier synchronizer unit AM–2450/FSG–1.

Page 328, figure 162.

Page 331, figure 170. Make the following changes:

In the figure caption, after "AM–2126/TSQ–36," add: *and AM–2450/FSG–1.*

After "AGC AMPLIFIER" (left center of sheet with number TM 5840–219–35–152① in lower right corner), add: for AM–3126/TSQ–36 (NOTE 15).

Add the following to the notes:

15. FOR THE AM–2450/FSG–1 CIRCUIT SEE AMPLIFIER SYNCHRONIZER UNIT AM–2450/FSG–1, AGC AMPLIFIER SCHEMATIC.

16. IN AMPLIFIER SYNCHRONIZER UNIT AM–2450/FSG–1, CAPACITOR C13 IS PARALLELED BY 0.1-MICROFARAD CAPACITOR C16.

Below "C13, .068 UF" (lower left corner, sheet with number TM 5840–219–35–152–② in lower right corner) add: (NOTE 16)

Figure 171. Make the following changes:

In the figure caption, after "AM–2126/TSQ–36," add: *and AM–2450/FSG–1.*

On figure 171 (sheet with number TM 5840–219–35–153① in lower right corner), add the following notes:

NOTES:

1. STATIONS 1 THROUGH 12 ARE FOR AM–2126/TSQ–36 ONLY. FOR STATIONS 1 THROUGH 12 OF AM–2450/FSG–1, SEE AMPLIFIER SYNCHRONIZER UNIT AM–2450/FSG–1, STATIONS 1 THROUGH 12, WIRING DIAGRAM.

2. PARTS PLACEMENT AS SHOWN IS FOR AM–2126/TSQ–36. IN AM–2450/FSG–1, AN ADDITIONAL CAPACITOR (C16) IS IN PARALLEL WITH C13.

On figure 171 (sheet with number TM 5840–219–35–153② in lower right corner), at station 27 after "1 WHT–YEL" and at station 29 after "1 WHT–YEL–BLU," add: (AM–2126/TSQ–36 only).

On figure 171 (sheet with number TM 5840–219–35–153④ in lower right corner), at the terminal board between stations 63 and 64, add: (NOTE 2).

Figure 172. Make the following changes:

In the figure caption, after "R–930/TSQ–36," add: *and R–975/FSG–1.* On the sheet with number TM 5840–219–35–154① in lower right corner, add the following to the notes:

14. THE AUXILIARY RELAY CIRCUIT SHOWN IS FOR RECEIVER UNIT R–930/TSQ–36 ONLY. FOR AUXILIARY RELAY CIRCUITS IN RECEIVER UNIT R–975/FSG–1, SEE RECEIVER UNIT R–975/FSG–1 AUXILIARY RELAYS, SCHEMATIC DIAGRAM.

After "TSG–23 and TSG–29 to J3," (center of sheet) terminals 11 and 12, add: (R–930/TSQ–36 ONLY).

On the sheet with number TM 5840–219–35–154② in lower right corner, at terminals 6 and 20 of J1, add: (NOTE 13).

At the three GROUND-SLANT switches, add: (NOTE 12).

On the sheet with number TM 5840–219–35–154③ in lower right corner, after "TSG–10 (J20–17)," add: (TSG–0, J20–18 in R–975/FSG–1).

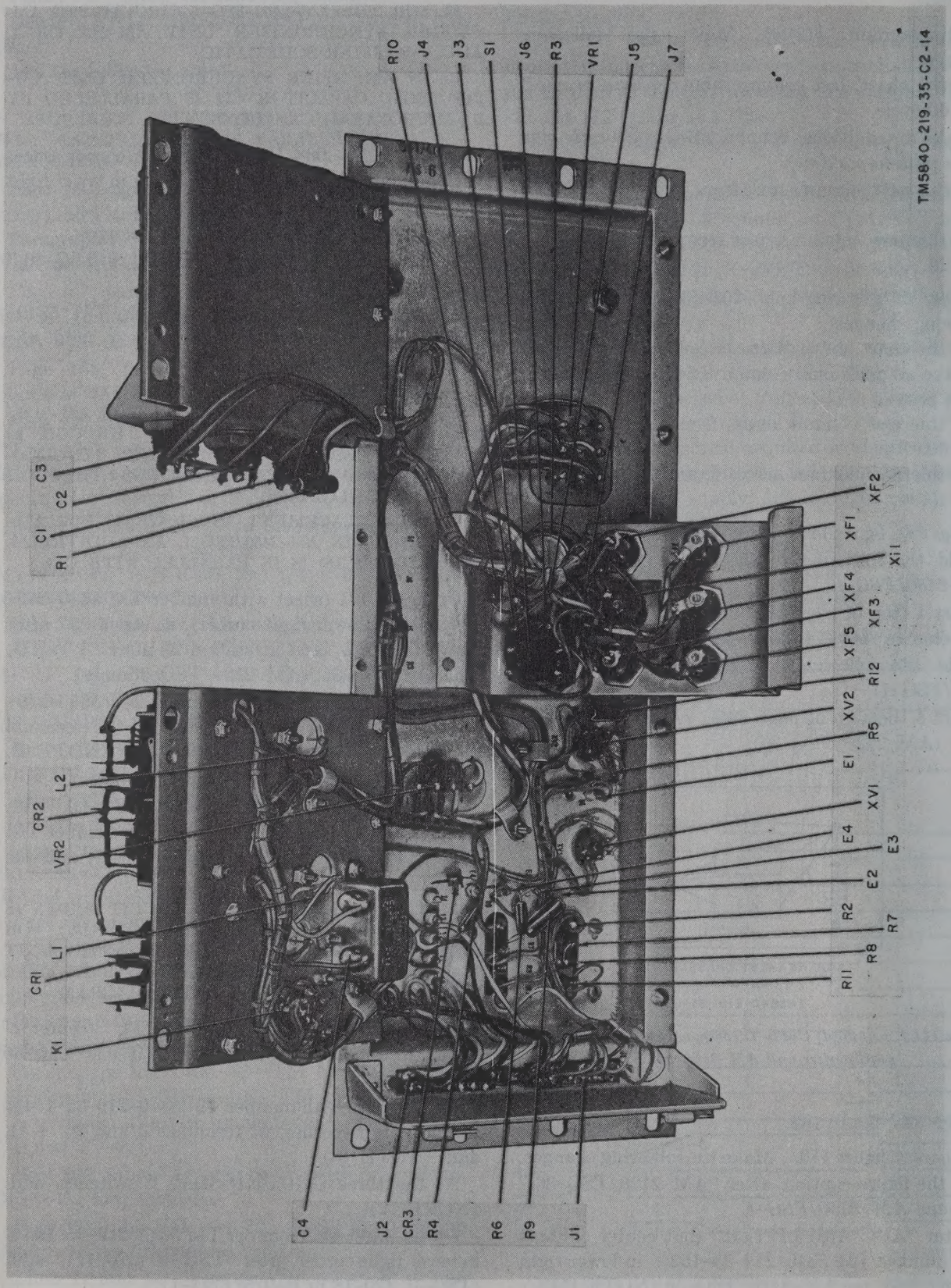

Figure 152.1. (Added) Power supply PP–2517/G, parts location, front view, hinged chassis open.

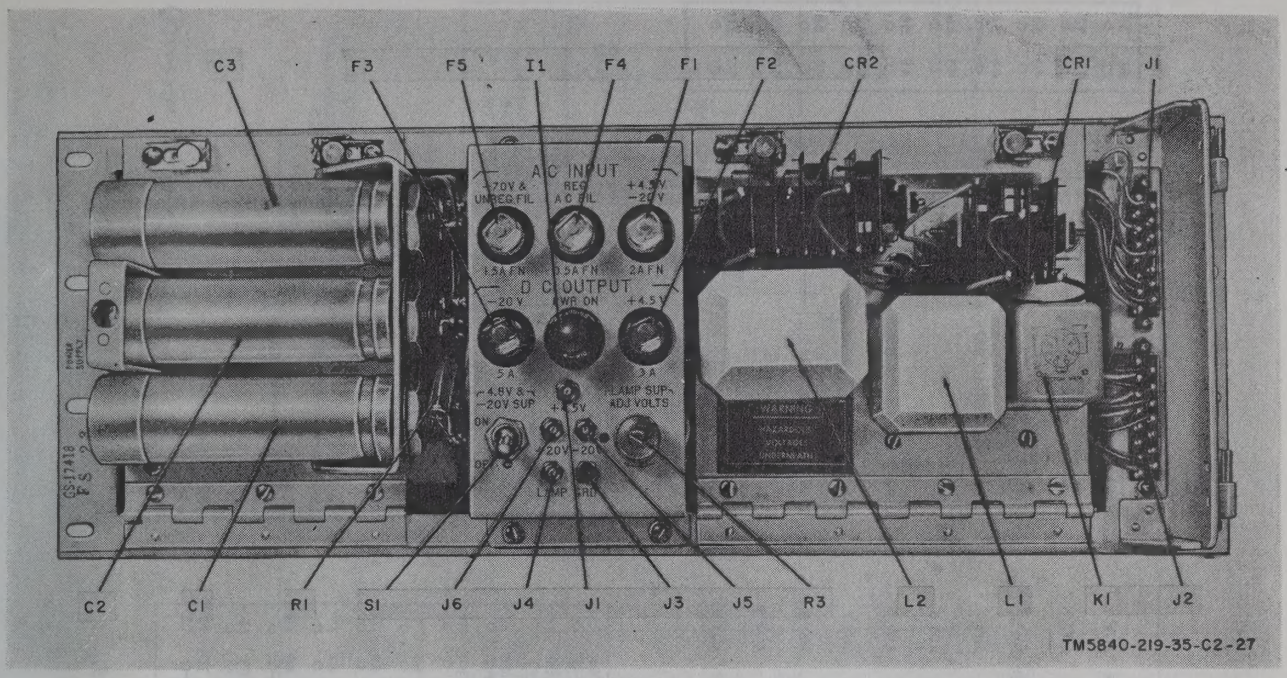

Figure 152.2. (Added) Power supply PP–2517/G, parts location, front view, hinged chassis closed.

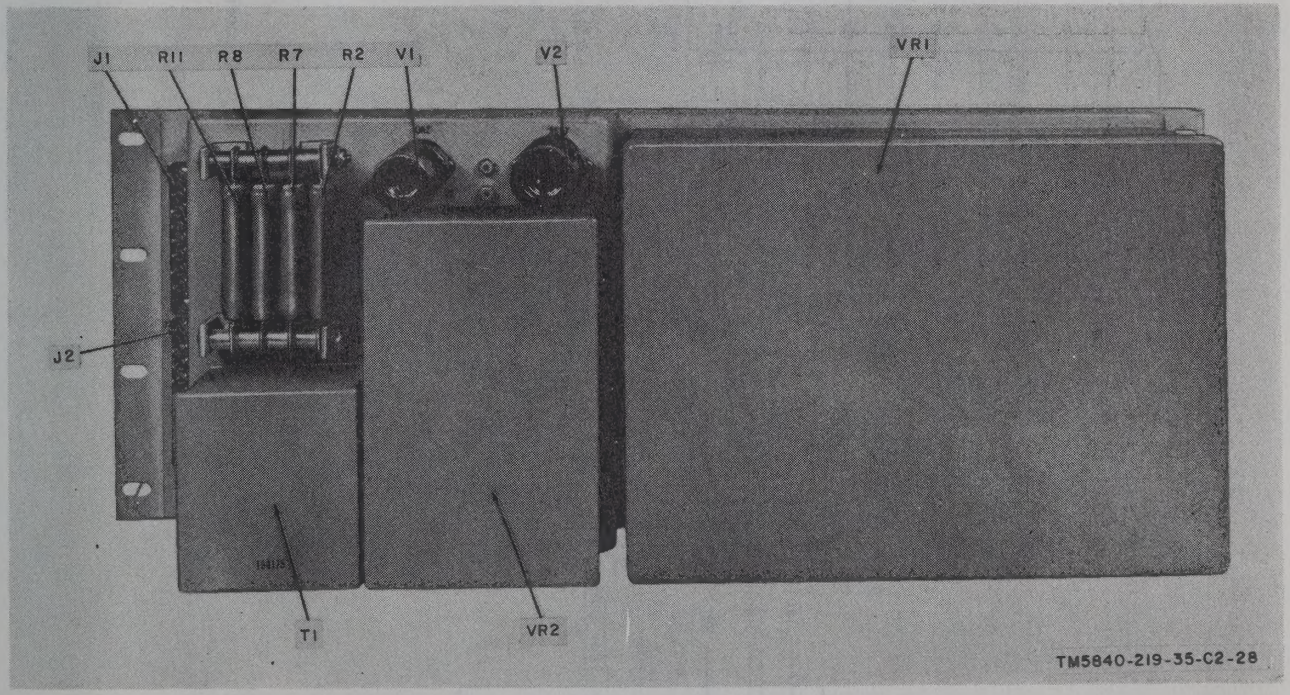

Figure 152.3. (Added) Power supply PP–2517/G, parts location, rear view.

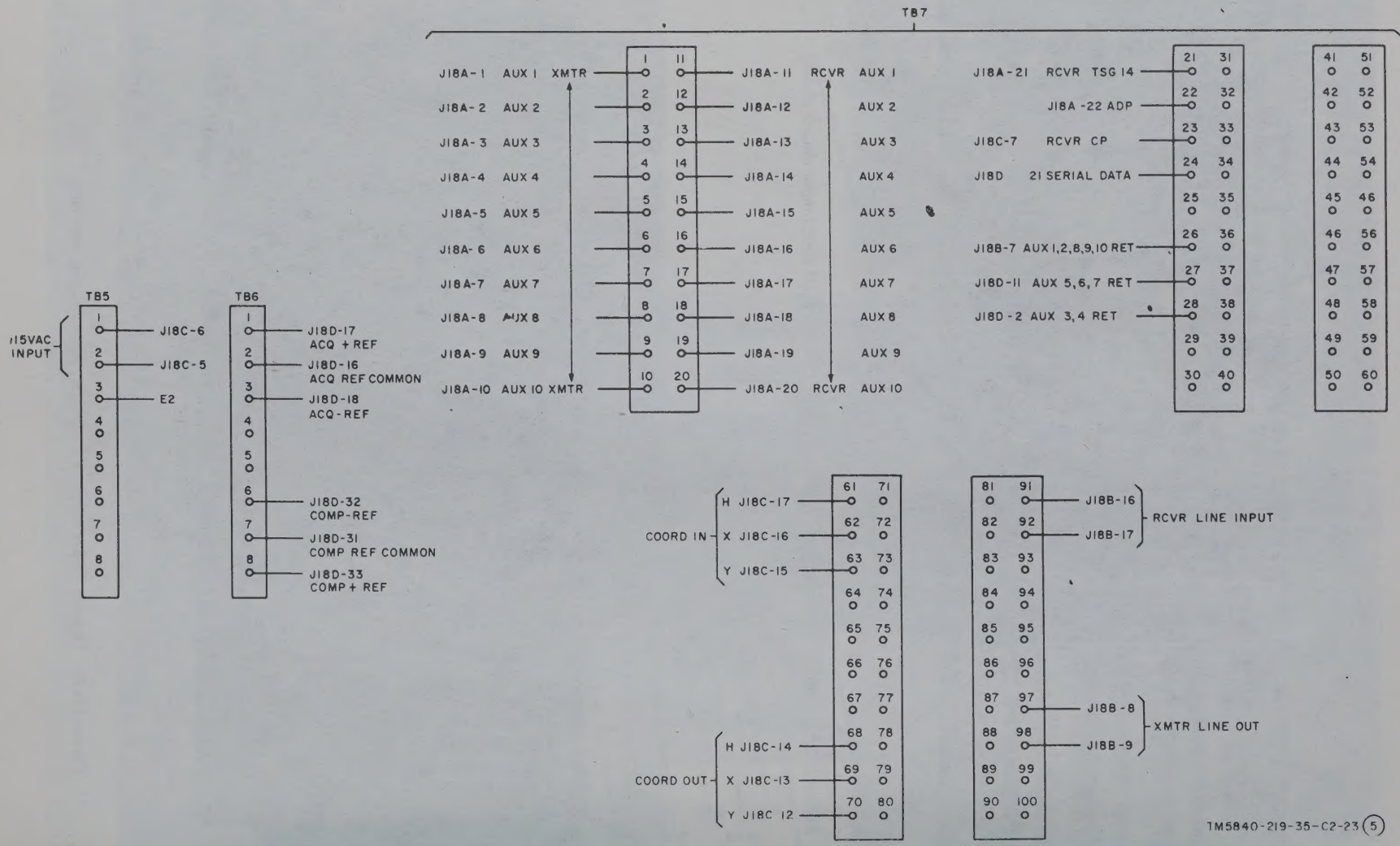

Figure 162.1—Continued, *part 5 of 5.*

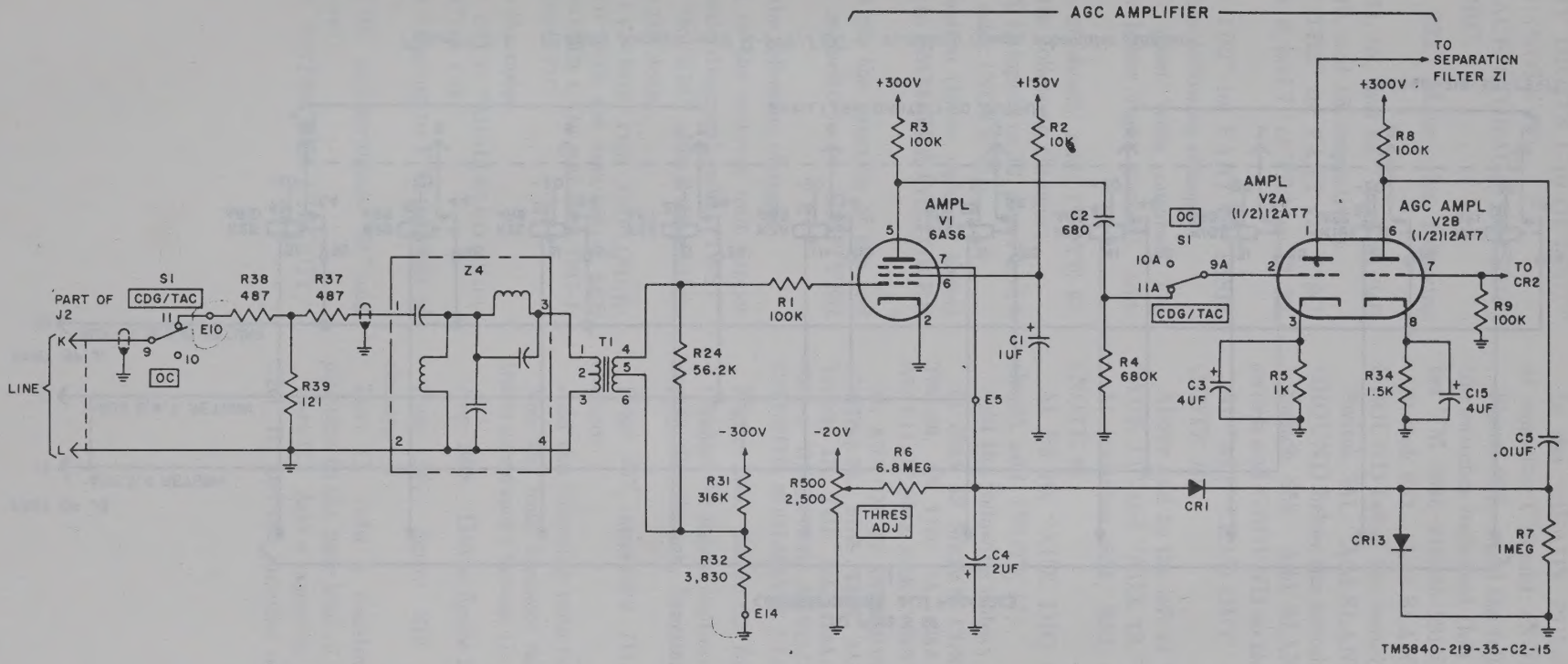

Figure 170.1. (Added) Amplifier synchronizer unit AM–2450/FSG–1 agc amplifier, schematic diagram.

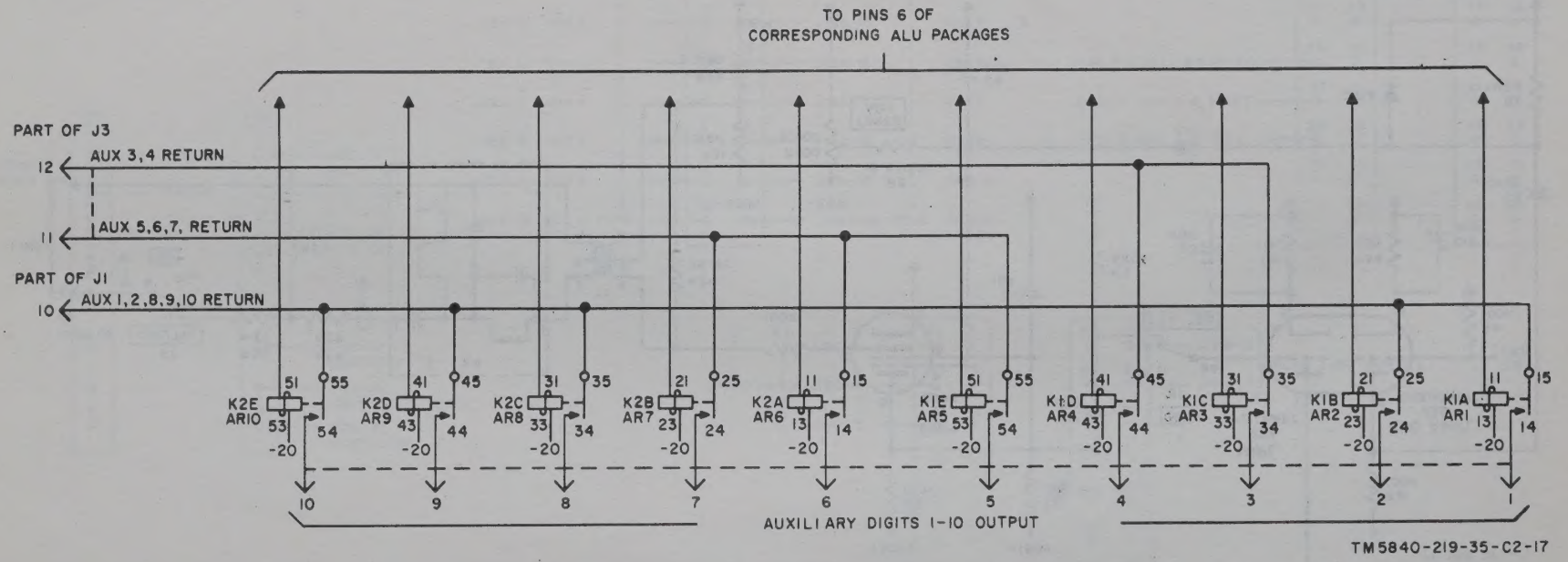

Figure 172.1. (Added) Receiver unit R-975/FSG-1, auxiliary relays, schematic diagram.

Below "AUXILIARY DIGITS 1–10 OUTPUT" (bottom of sheet), add: (NOTE 14).

At J46 (H FEEDBACK STORAGE LOCKUP) in the block, add: D PKG.

Page 346, figure 202. Make the following changes:

Change terminals "61, 62, and 63," of TB3 (left side of figure) to: 17, 16, and 15, respectively.

Change "PART OF TB3" to: PART OF P18C.

Change terminals "8, 6, and 7" of TB2 to: 33, 32, and 31, respectively.

Change "PART OF TB2" to: PART OF P18D.

Figure 203. Make the following changes:

At S60B (side of sheet with number TM 5840–219–35–187① in lower right corner), add: (NOTE 6).

At S60A (right side of sheet), add: (NOTE 6).

Figure 204. Make the following changes:

At AUX 11 and AUX 12 inputs to J2, pins 7 and 8 (upper right of sheet), add: (NOTE 6).

In the modulator section (lower right of sheet) delete the lead from Z3 to EMMITER FOLLOWER Q5.

Add a lead from Z3 (at the junction of the coil and the uppermost capacitor) to EMITTER FOLLOWER Q5.

Figure 205. Make the following changes:

At TPC swtich S41 in the receiver unit (upper right corner of schematic diagram), add "TEST" below the switch and "NORM" above the switch.

Add the following to the notes:

8. FOR AM–2126 ONLY. FOR THE AMPLIFIER-DETECTOR CIRCUIT OF THE AM–2450/FSG–1, SEE AMPLIFIER SYNCHRONIZER UNIT AM–2450/FSG–1, AGC AMPLIFIER, SCHEMATIC.

Add the following to the notes:

9. IN AM–2450/FSG–1, C13 IS PARALLELED BY 0.1-MICROFARAD CAPACITOR C16.

At the part of switch S1 going to F/O (top left of figure), add: (NOTE 7).

Delete "PART OF TB3" and terminals "91" and "92" (center left of figure).

After "AMPLIFIER DETECTOR CIRCUIT," add: (NOTE 8).

In the "READY PULSE DELAY CIRCUIT" at capacitor C13 add: (NOTE 9).

Figure 207. Add the following panel markings to the switches indicated (left side of sheet with number TM 5840–219–35–191① in lower right corner):

Switch S52. Add SLANT above the switch and GROUND below the switch.

Switch S51. Add SLANT above the switch and GROUND below the switch.

Switch S53. Add SLANT to the right of the switch and GROUND to the left of the switch.

At "ALU READ OUT" (bottom of sheet), add: (NOTE 10).

Above and to the left of "ALU READ OUT" at "AUX 11" and "AUX 12," add: (NOTE 9).

At switches S51, S52 and switch S53, add: (NOTE 8).

At P5–10, "AUX DIG COM" (upper right of sheet), add: (NOTE 11).

Add the following notes:

10. S54A IS SHOWN CONNECTED IN THE AN/TSQ–36. IN THE OA–1425A/FSG–1, TERMINALS 10 AND 11 OF S54A ARE CONNECTED TO TSG–0.

11. AUX DIGIT COMMON IS SHOWN FOR THE AN/TSQ–36. FOR THE AUX RETURN CONNECTIONS IN THE OA–1425A/FSG–1, SEE OA–1425A/FSG–1 RECEIVER AUXILIARY RELAY RETURN CIRCUITS, SCHEMATIC DIAGRAM.

Figure 208. Make the following changes:

Change the figure caption to: **AN/TSQ–36 power supply distribution, functional schematic diagram.**

Page 357, appendix III. Make the following changes:

Add the following note below the appendix title:

Note. For basic transistor theory, refer to TM 11–690. Delete paragraphs 1 through 17.

Page 363. Delete figure 212.

Page 367, figure 213. Make the following changes:

Part C. Add a resistor between C1 and its junction to the base lead of transistor Q1.

Part E. Add a capacitor between the junction of CR1, R1 and the junction or L1, R3.

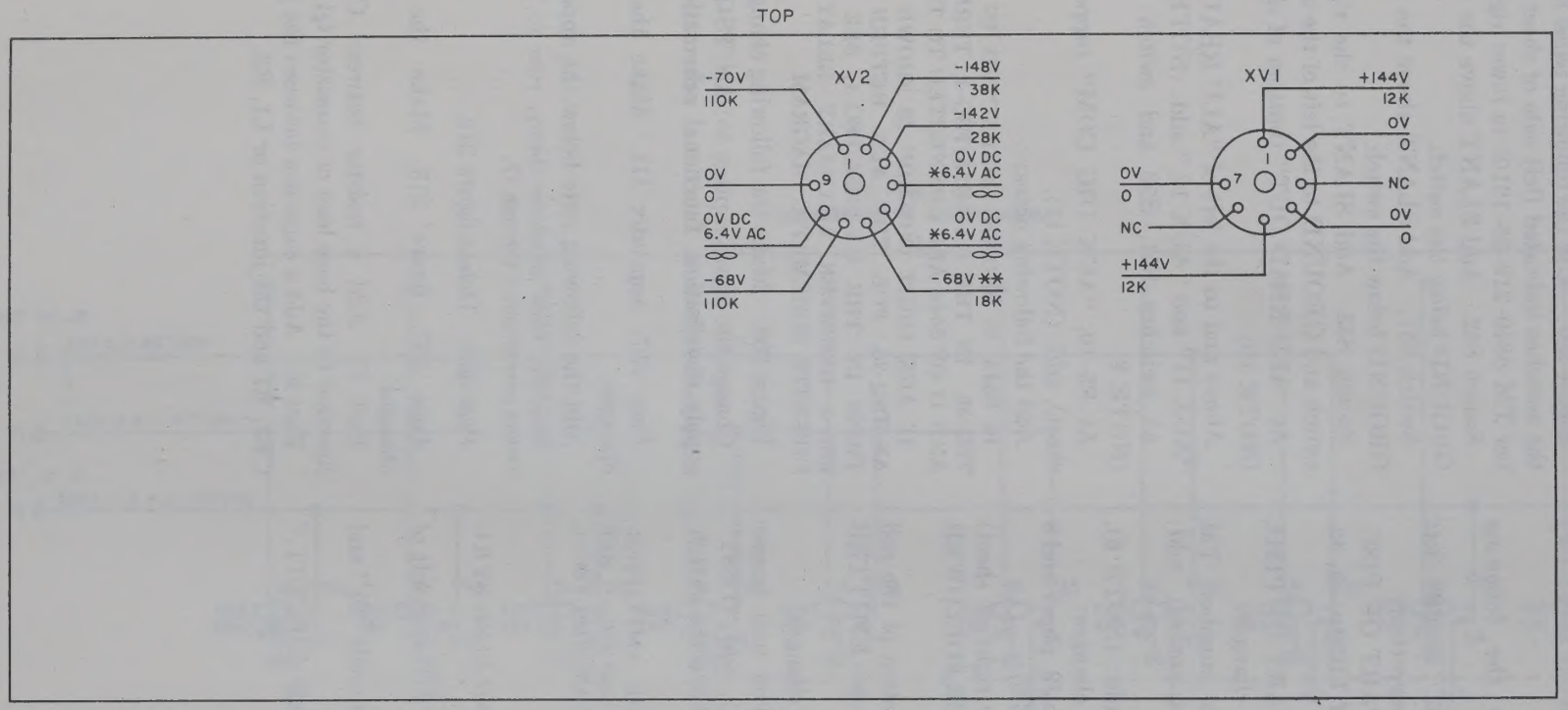

NOTES:

1. VOLTAGE MEASUREMENTS ARE MADE WITH 20,000 OHMS PER VOLT METER.
2. * MEASURED TO PIN 8 OF XV2
3. ** VARIES WITH LAMP SUPPLY ADJUSTMENT.

TM5840-219-35-C2-22

Figure 183.1. (Added) Power supply PP–2517/G, voltage and resistance diagram.

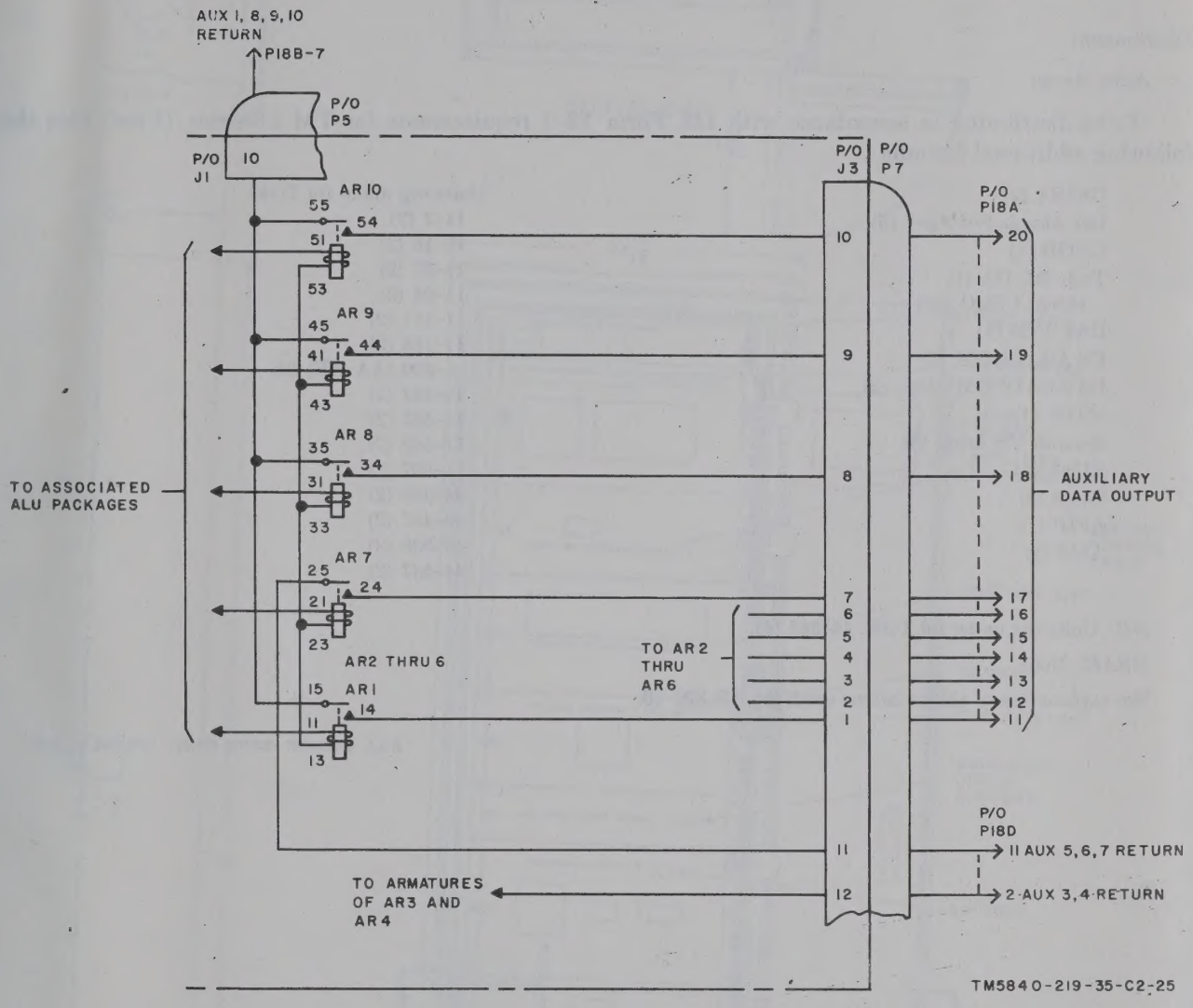

Figure 207.1. (Added) OA–1425A/FSG–1 receiver auxiliary relay return circuits, schematic diagram.

By Order of *Wilber M. Brucker*, Secretary of the Army:

L. L. LEMNITZER,
General, United States Army,
Chief of Staff.

Official:

R. V. LEE,
Major General, United States Army,
The Adjutant General.

Distribution:

Active Army:

To be distributed in accordance with DA Form 12–7 requirements for TM 11-series (Uncl) Plus the following additional formula:

USASA (2)
Def Atomic Spt Agcy (5)
CNGB (1)
Tech Stf, DA (1)
except CSigO (18)
USA ATB (1)
US ARADCOM (2)
US ARADCOM Rgn (2)
MDW (1)
Seventh US Army (5)
EUSA (5)
Corps (2)
AFIP (1)
AMS (1)

Units org under fol TOE:
11–7 (2)
11–16 (2)
11–57 (2)
11–98 (2)
11–117 (2)
11–155 (2)
11–500 (AA–AE) (2)
11–557 (2)
11–587 (2)
11–592 (2)
11–597 (2)
44–436 (2)
44–437 (2)
44–536 (2)
44–537 (2)

NG: Units org under fol TOE: 44–545 (4).

USAR: None.

For explanation of abbreviations used, see AR 320–50.

☆ U.S. GOVERNMENT PRINTING OFFICE: 1975--568-268/677A

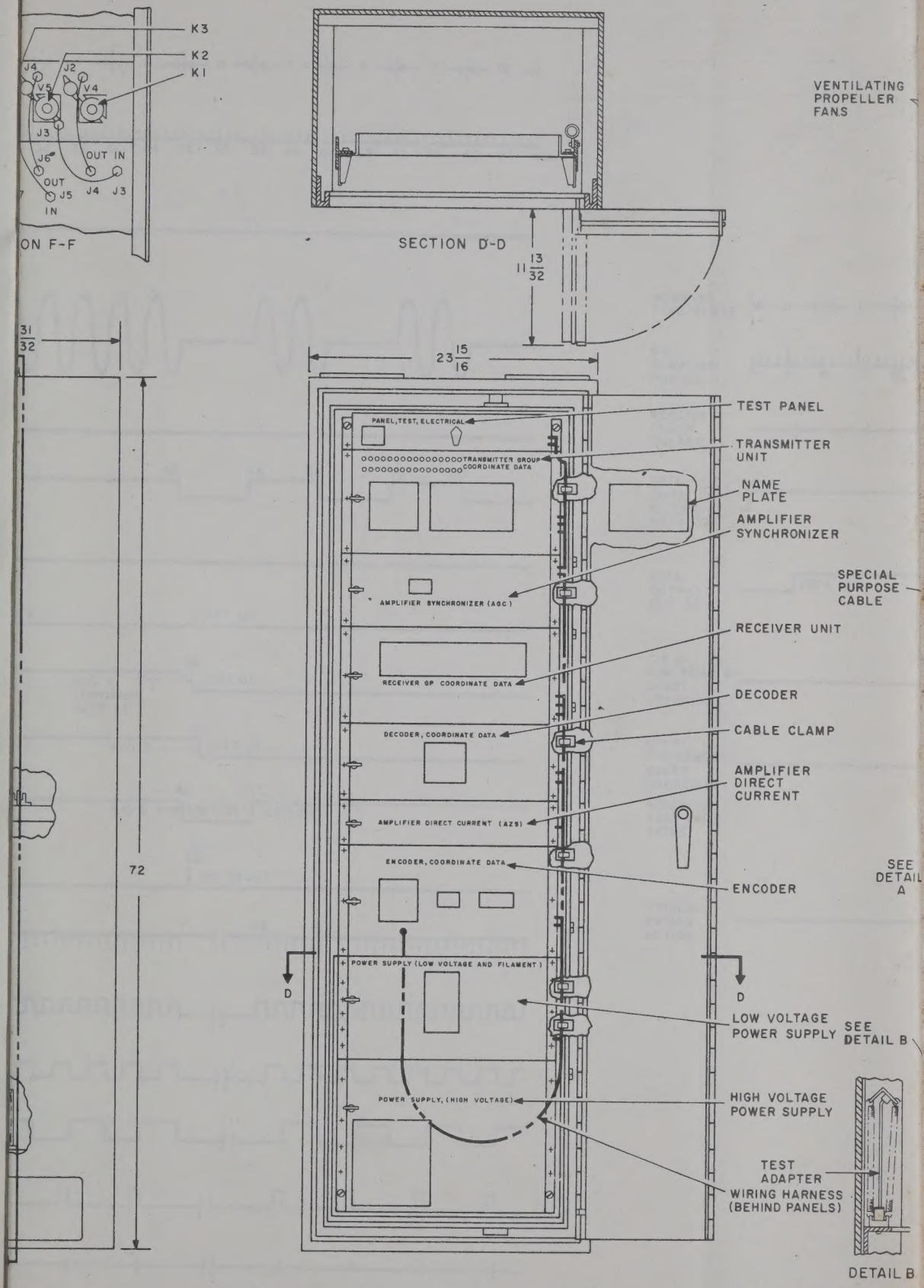

Figure 7.1. (Added) Coordinate Data Set Group OA–1425A/FSG–1, cabinet details.

By Order of *Wilber M. Brucker*, Secretary of the Army:

L. L. LEMNITZER,
General, United States Army,
Chief of Staff.

Official:

R. V. LEE,
Major General, United States Army,
The Adjutant General.

Distribution:

Active Army:

To be distributed in accordance with DA Form 12–7 requirements for TM 11-series (Uncl) Plus the following additional formula:

USASA (2)
Def Atomic Spt Agcy (5)
CNGB (1)
Tech Stf, DA (1)
except CSigO (18)
USA ATB (1)
US ARADCOM (2)
US ARADCOM Rgn (2)
MDW (1)
Seventh US Army (5)
EUSA (5)
Corps (2)
AFIP (1)
AMS (1)

Units org under fol TOE:
11–7 (2)
11–16 (2)
11–57 (2)
11–98 (2)
11–117 (2)
11–155 (2)
11–500 (AA–AE) (2)
11–557 (2)
11–587 (2)
11–592 (2)
11–597 (2)
44–436 (2)
44–437 (2)
44–536 (2)
44–537 (2)

NG: Units org under fol TOE: 44–545 (4).

USAR: None.

For explanation of abbreviations used, see AR 320–50.

☆ U.S. GOVERNMENT PRINTING OFFICE: 1975--568-268/677A

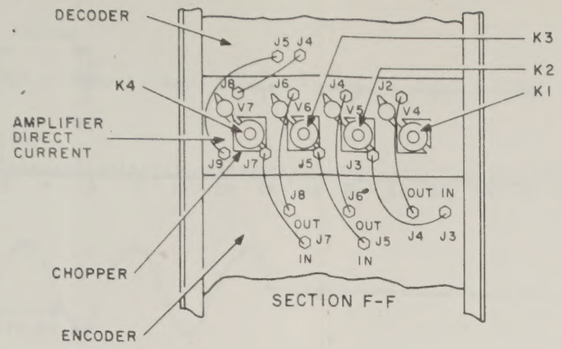

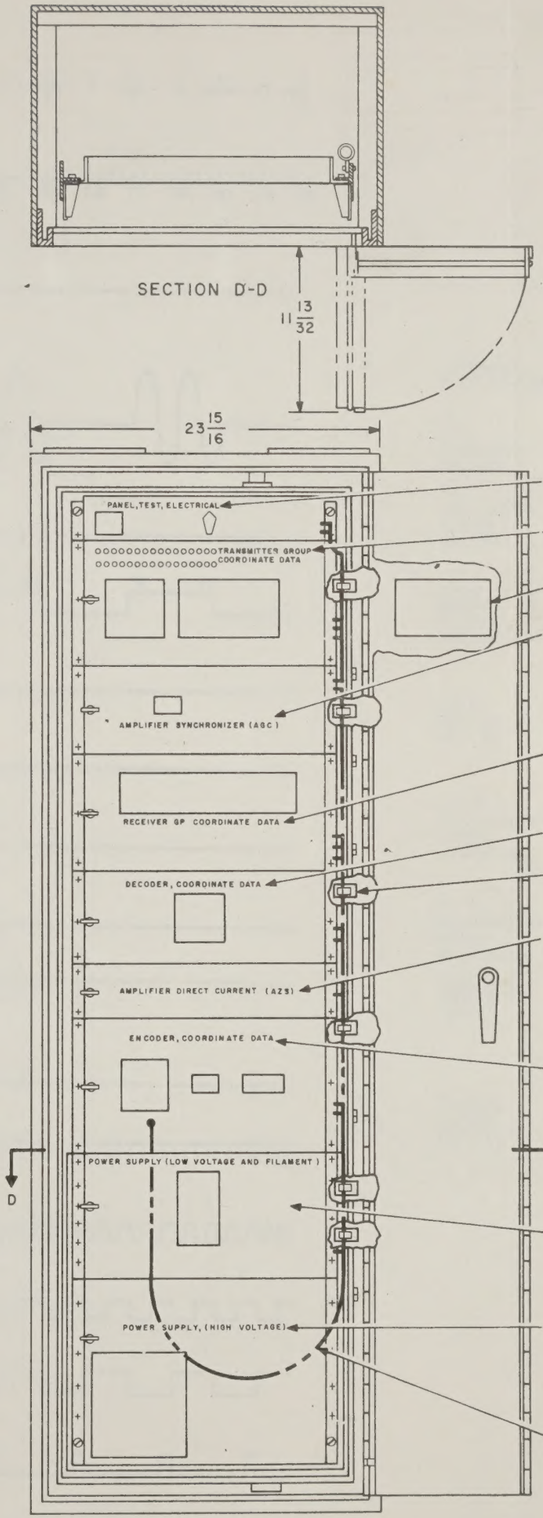

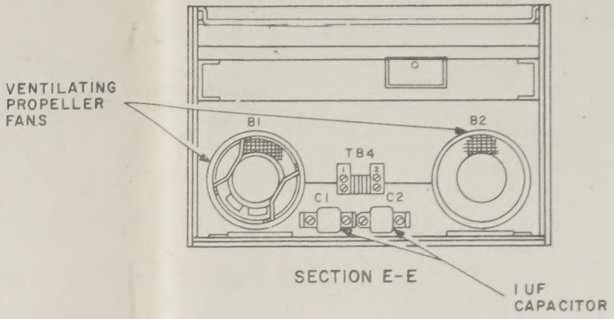

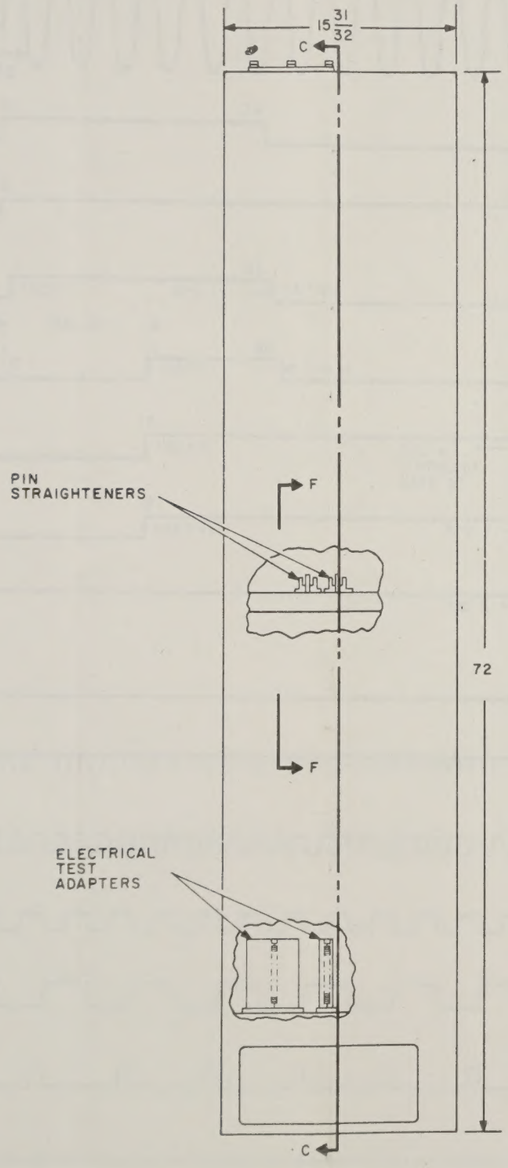

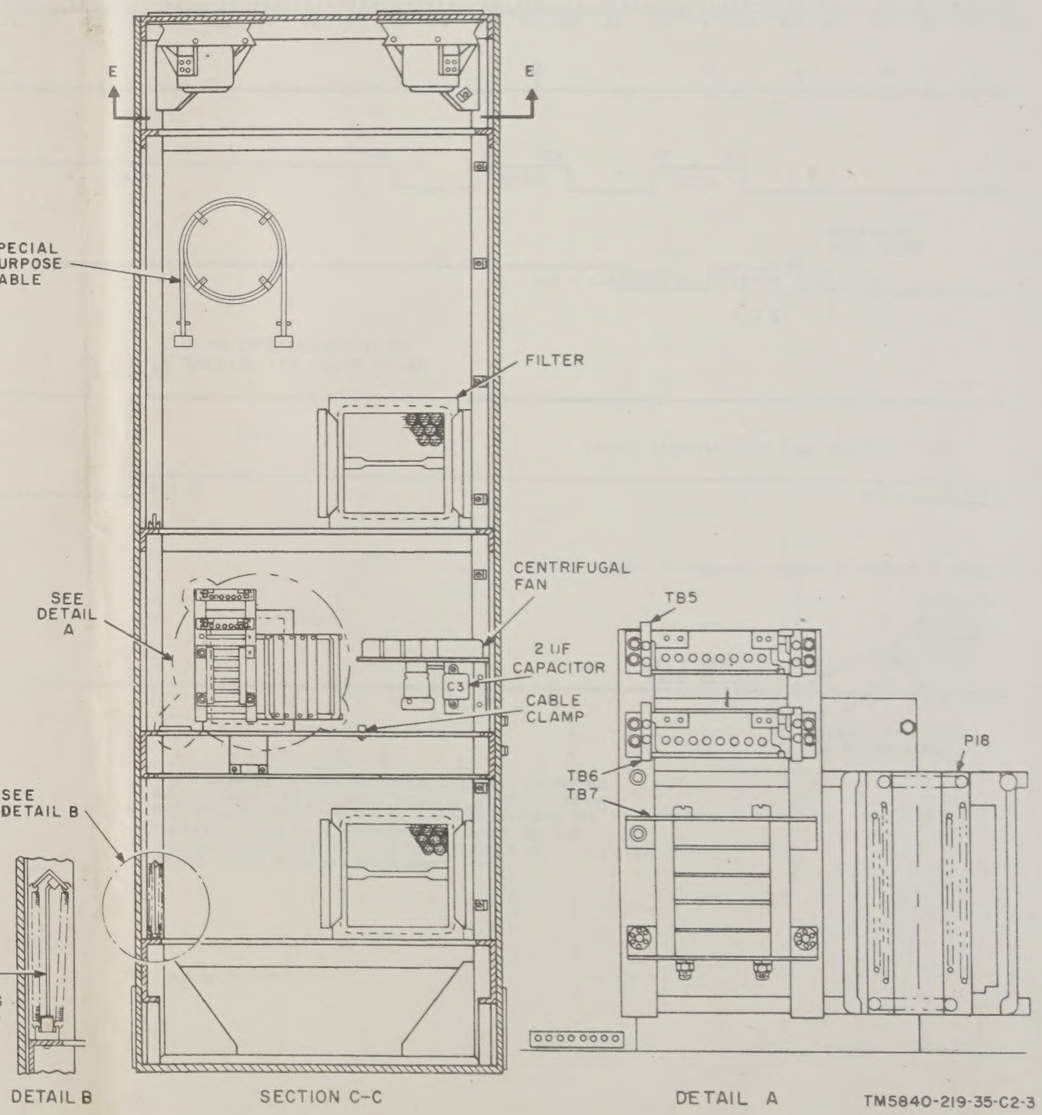

TM5840-219-35-C2-3

Figure 7.1. (Added) Coordinate Data Set Group OA–1425A/FSG–1, cabinet details.

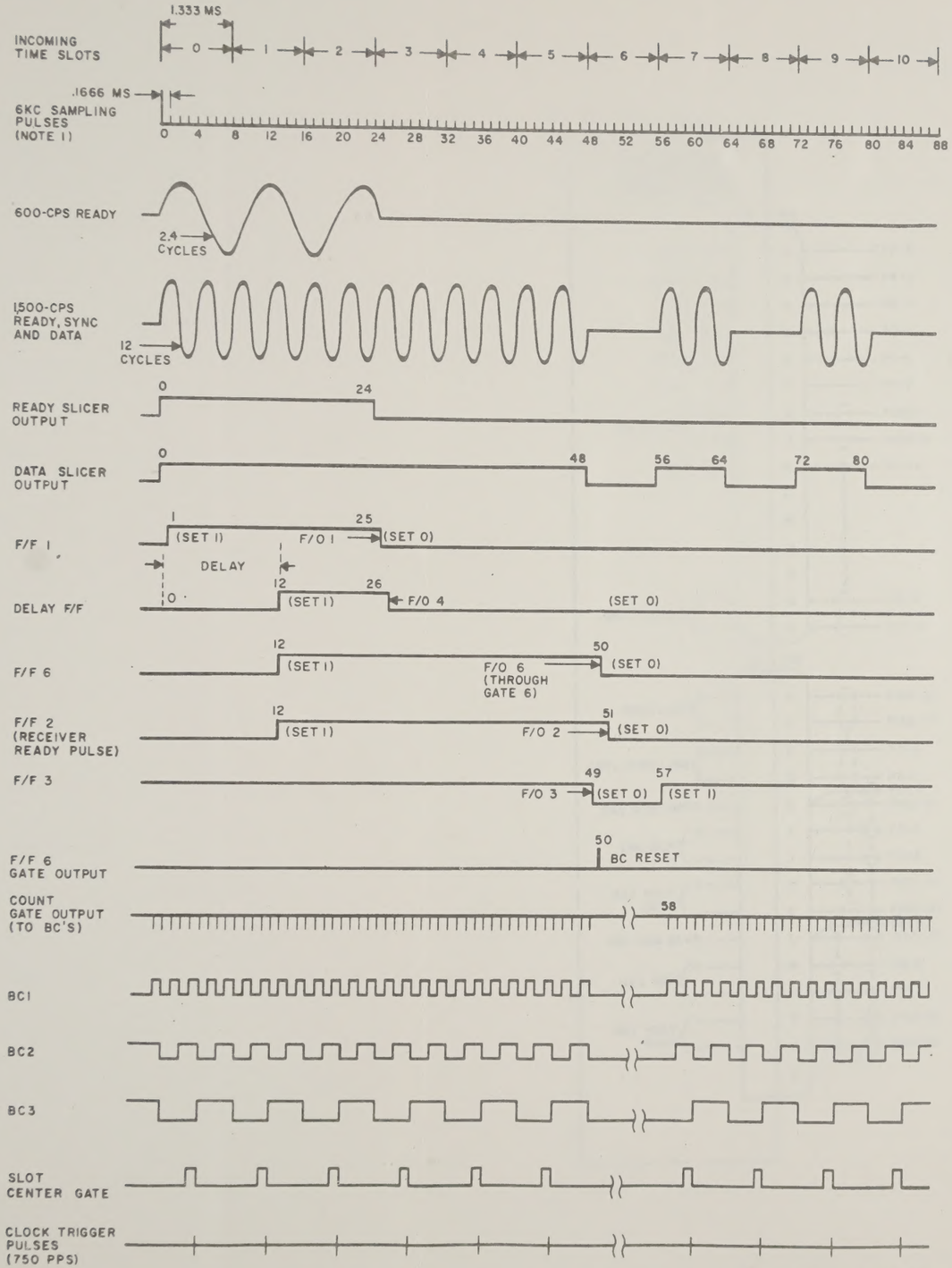

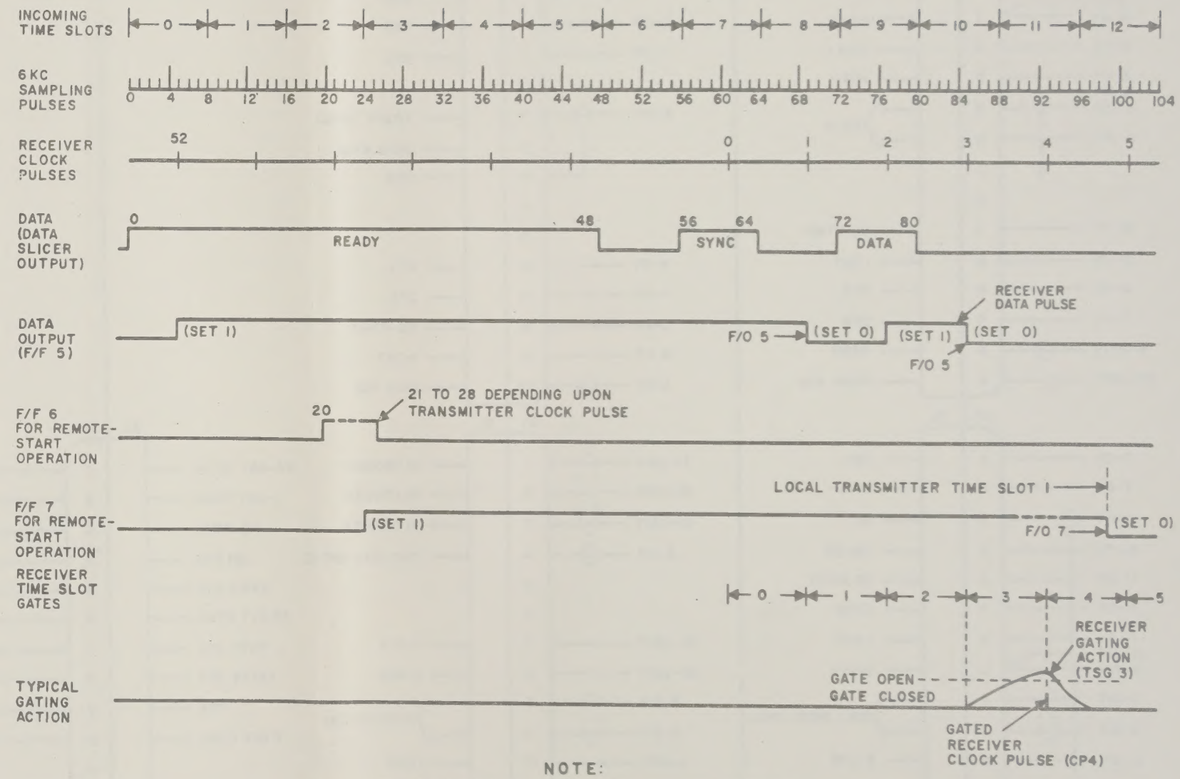

NOTE:

THE TIMING RELATION BETWEEN THE 6KC SAMPLING PULSES AND THE INCOMING DATA IS STRICTLY RANDOM. THE RELATIONSHIP SHOWN IS FOR CONVENIENCE OF IDENTIFICATION ONLY, HOWEVER, A SHIFT OF THE INCOMING DATA TIMING CAN NOT RESULT IN A GREATER ERROR THAN ± 83 MICROSECONDS.

Figure 88.1. (Added) OA-1425A/FSG-1 receiver input section, timing diagram.

TM5840-219-35-C2-11

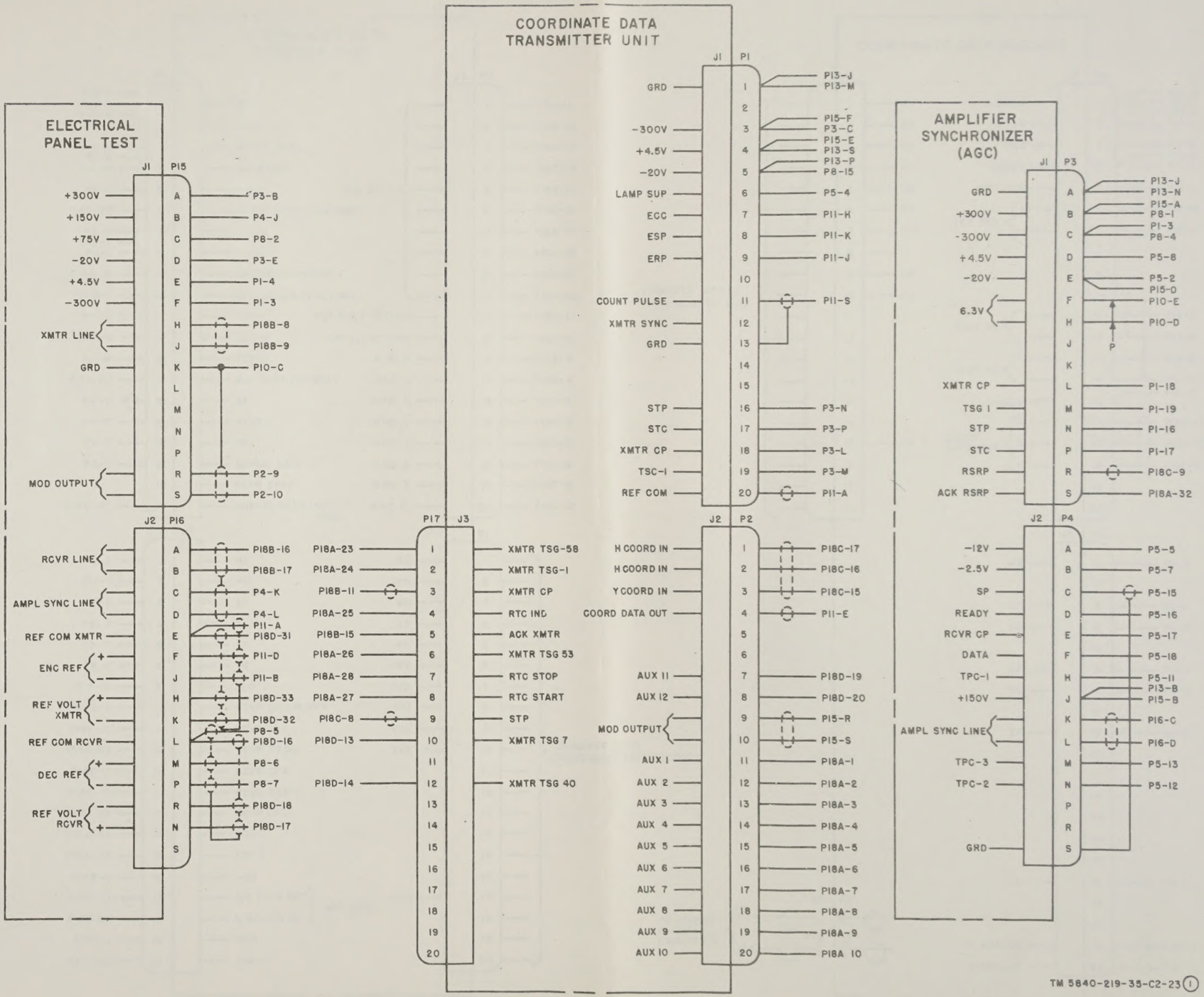

Figure 162.1. (Added) Coordinate data set OA–1425A/FSG–1, interconnecting schematic diagram, part 1 of 5.

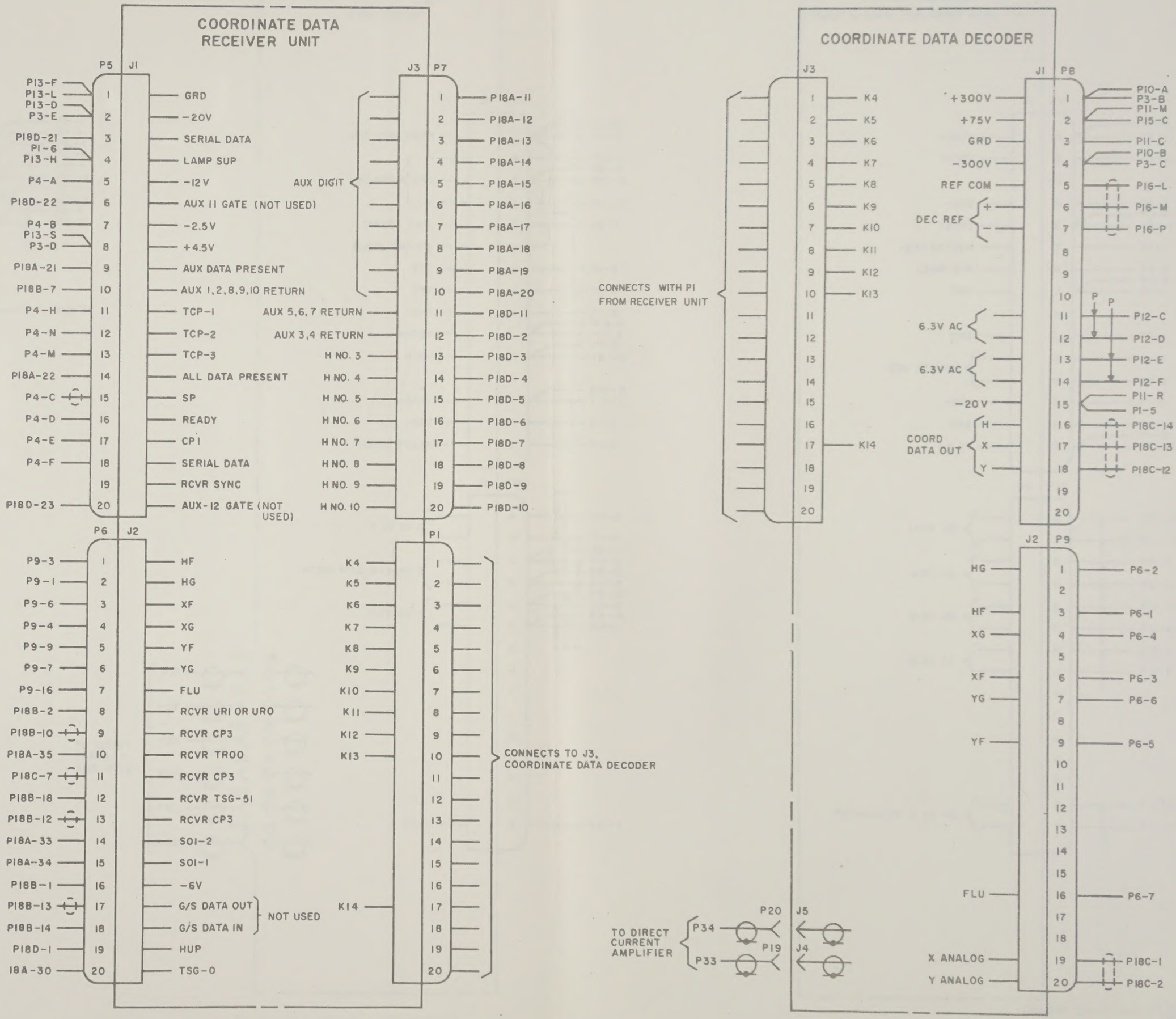

Figure 162.1—Continued, *part 2 of 5.*

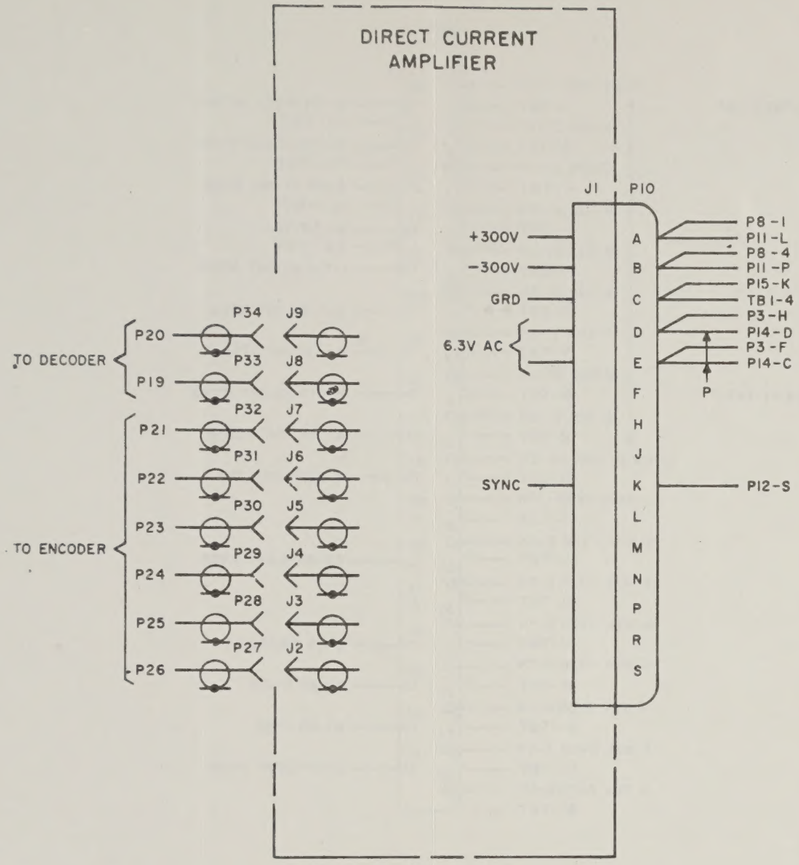

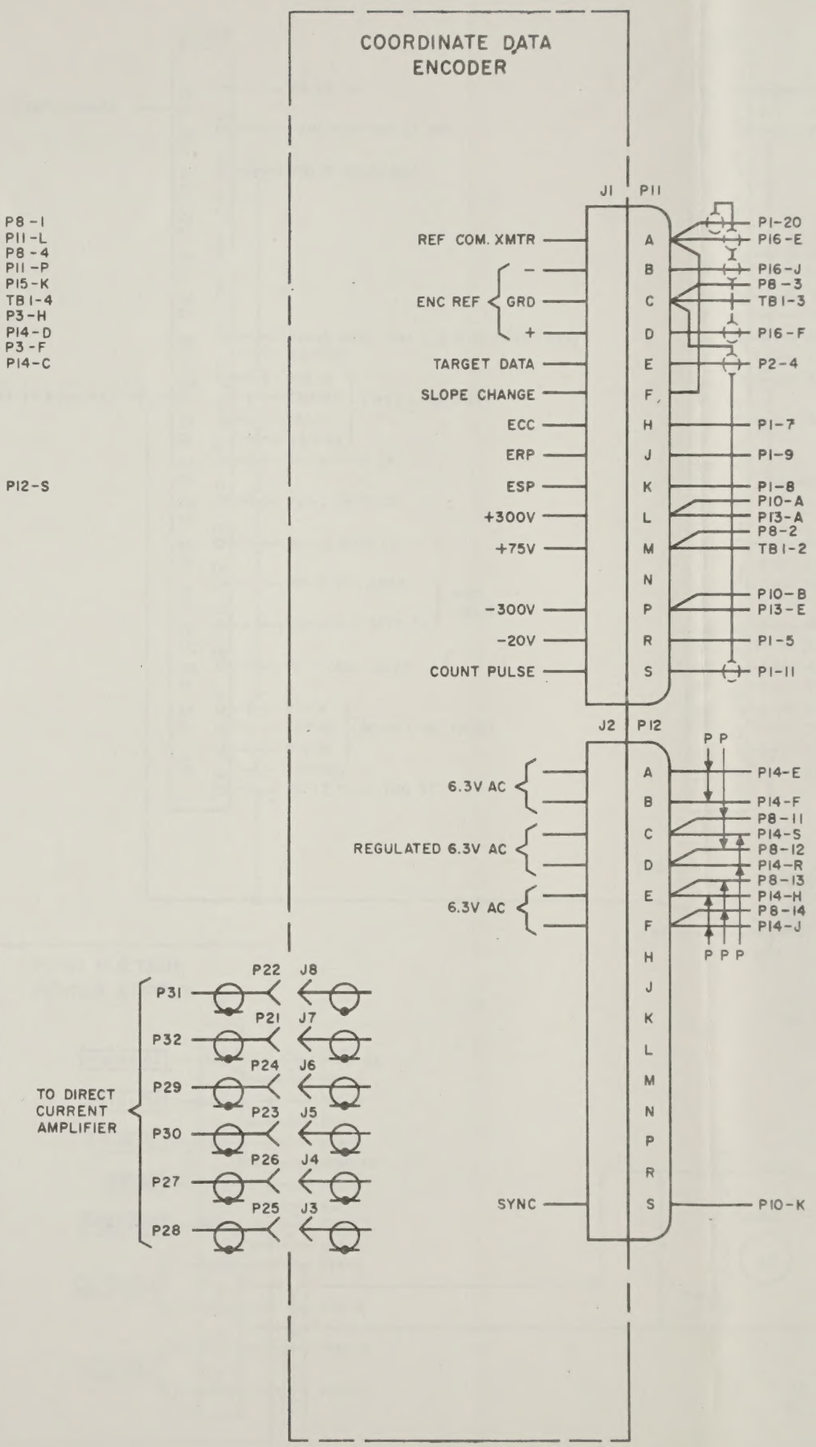

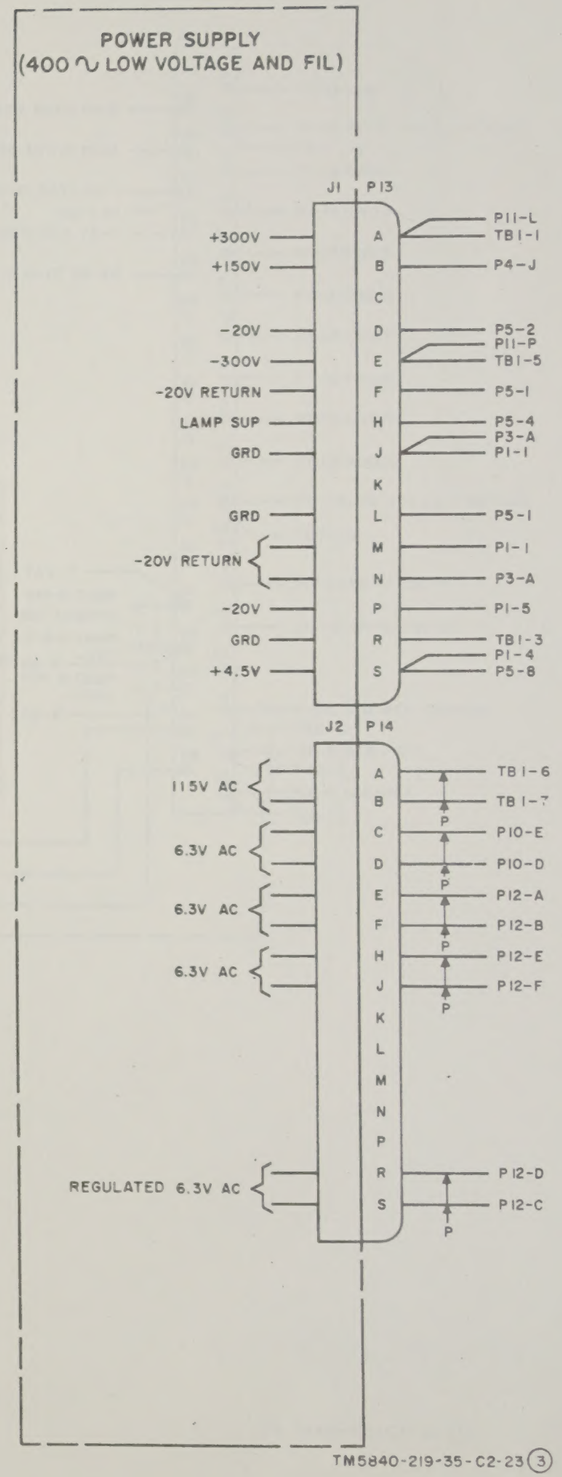

Figure 162.1—Continued, *part 3 of 5.*

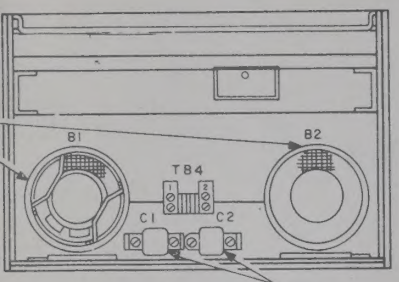

SECTION E-E

1 UF CAPACITOR

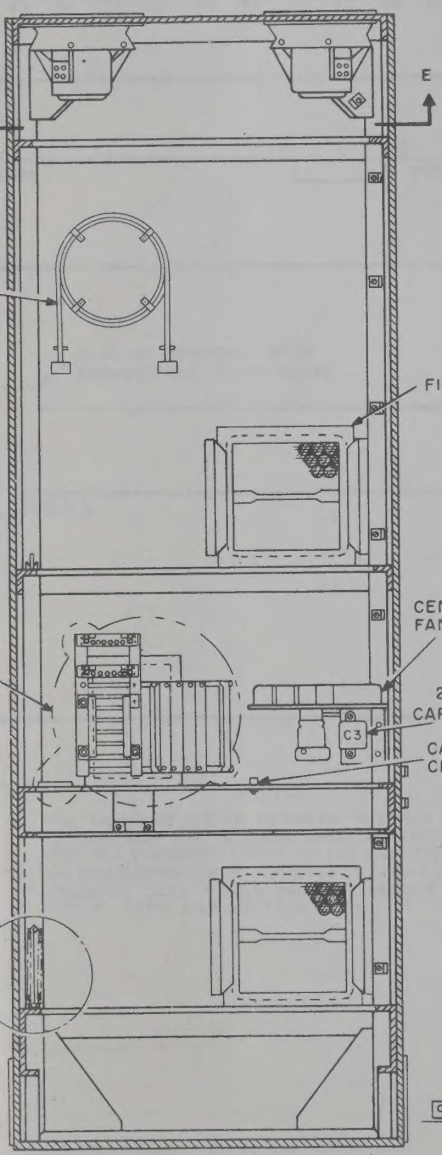

SECTION C-C

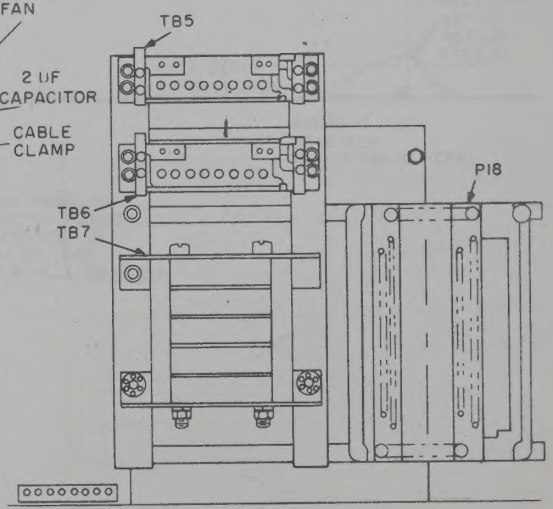

DETAIL A

TM5840-219-35-C2-3

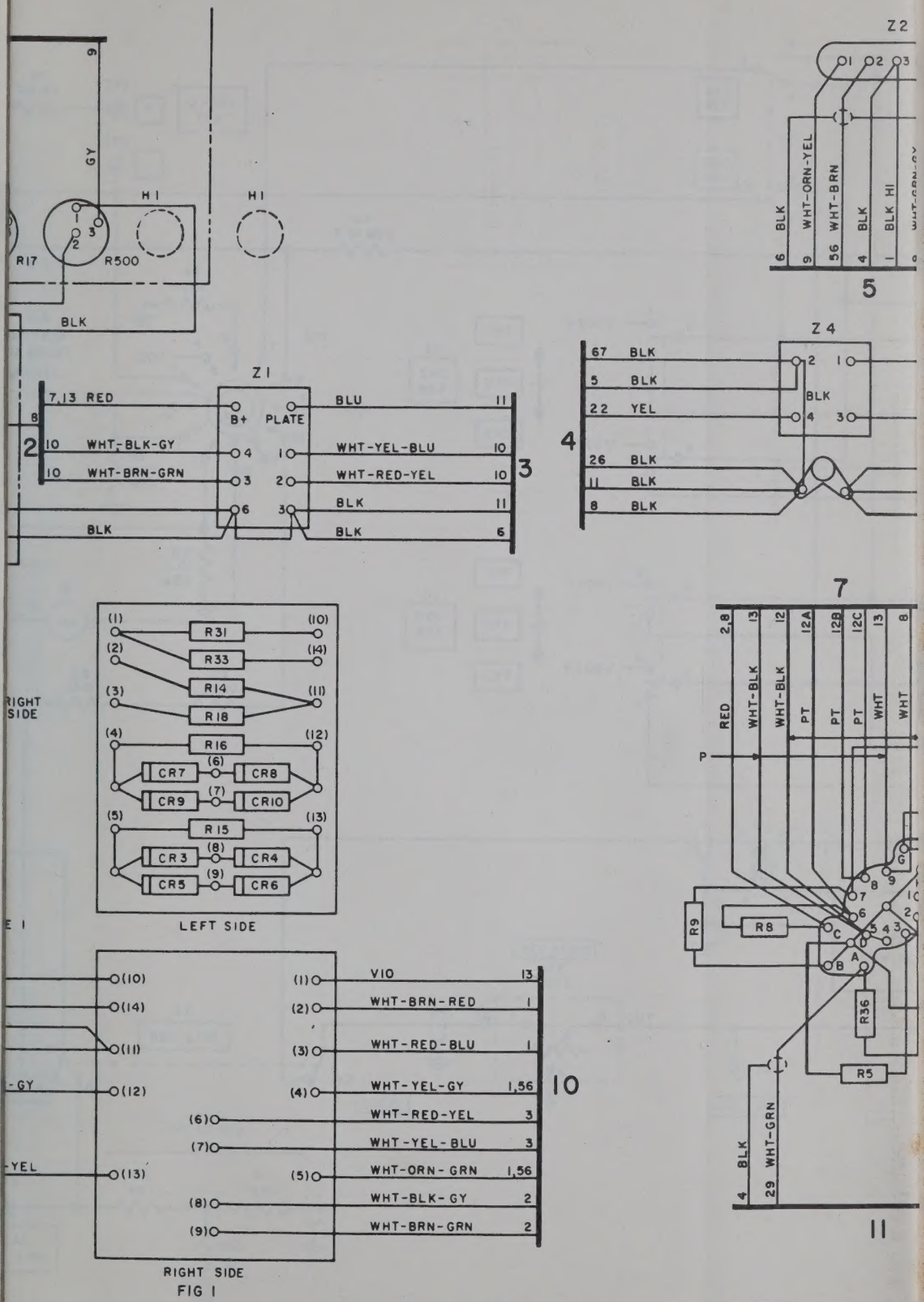

Figure 171.1. (Added) Amplifier synchronizer unit AM–2450/FSG–1, stati

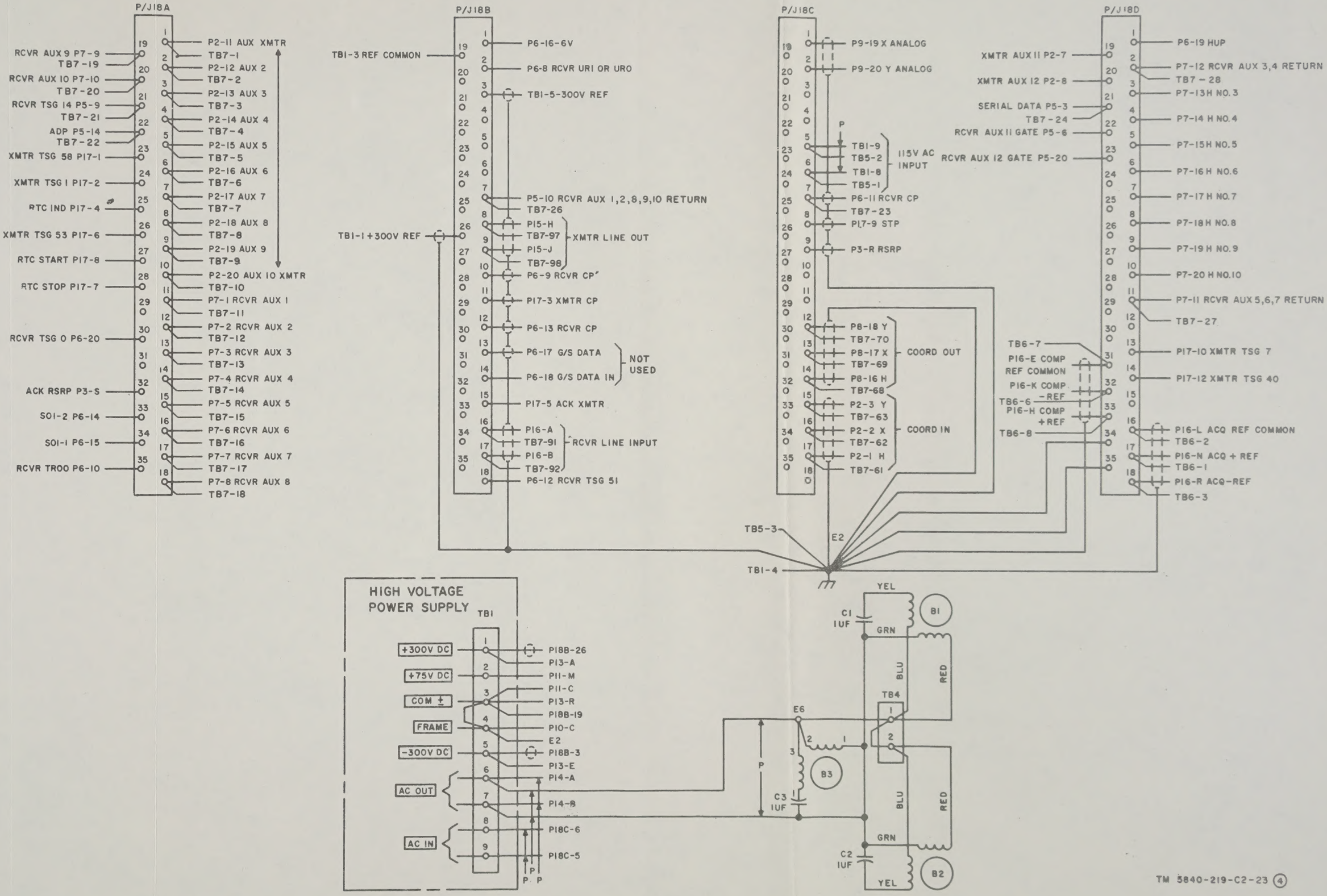

TM 5840-219-C2-23 (4)

Figure 162.1—Continued, *part 4 of 5.*

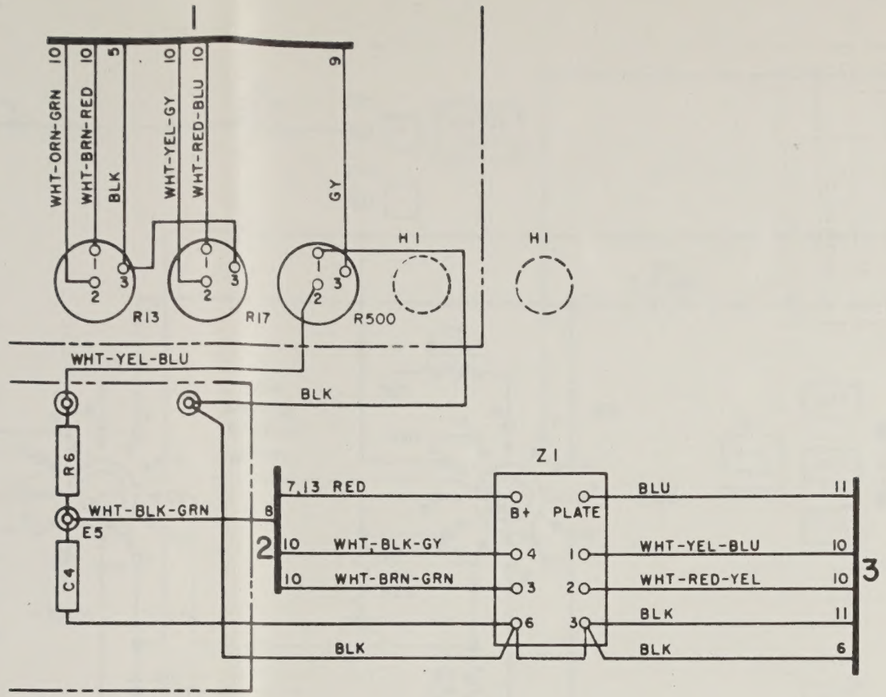

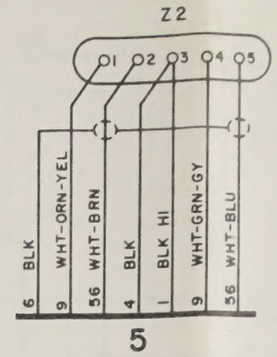

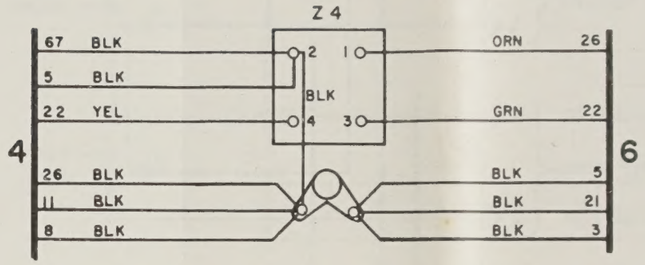

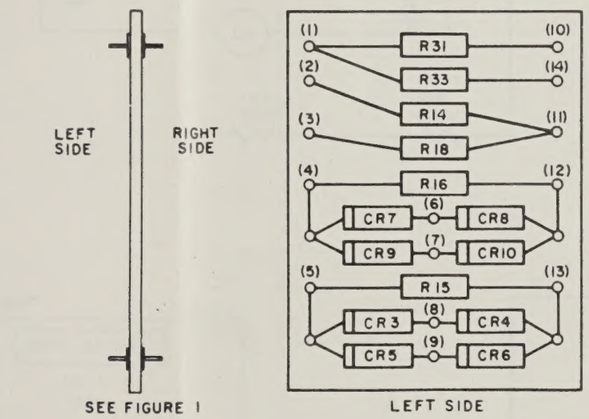

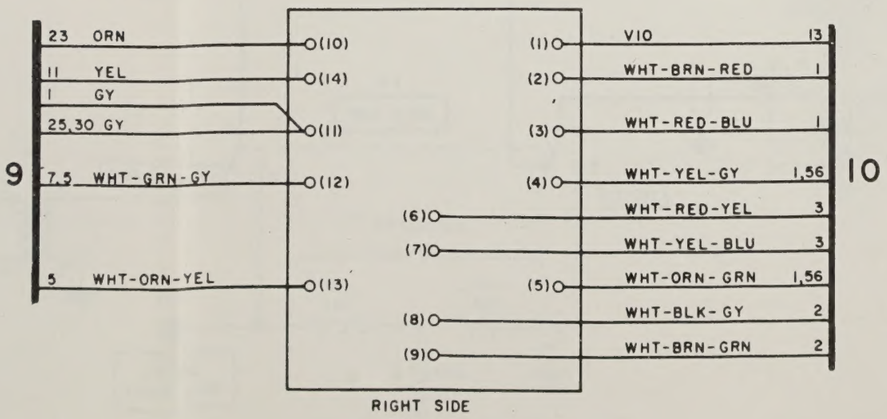

FIG 1

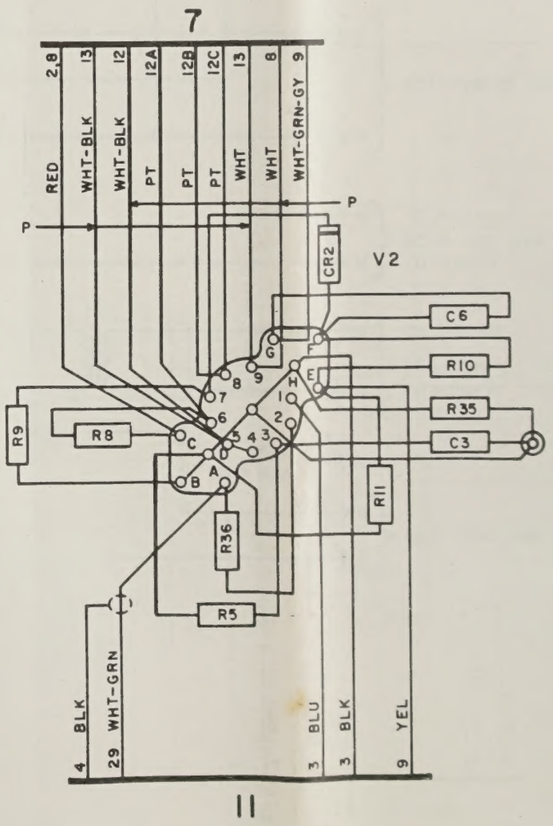

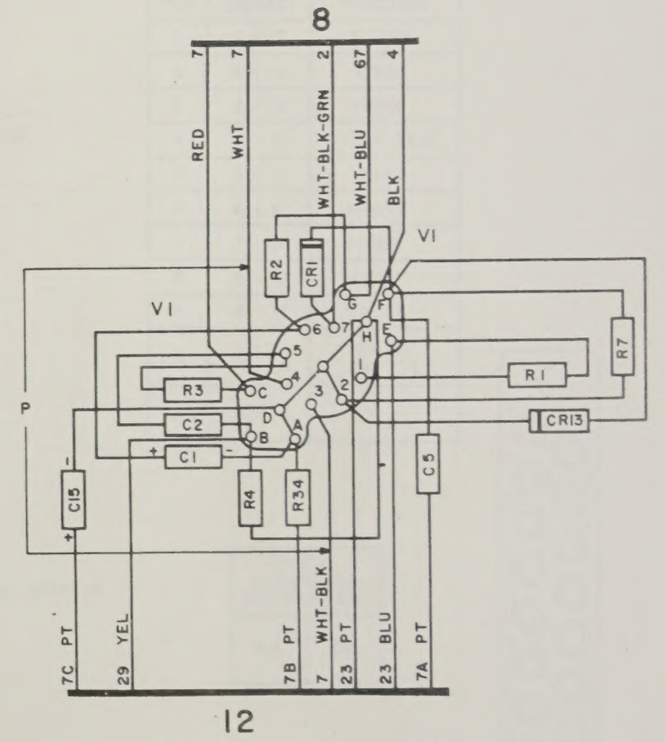

Figure 171.1. (Added) Amplifier synchronizer unit AM–2450/FSG–1, stations 1 through 12, wiring diagram.

NOTES:

1. UNLESS OTHERWISE INDICATED RESISTANCES ARE IN OHMS.
2. TERMINAL NUMBERS FOR ALL SWITCHES ARE FOR REFERENCE ONLY. RELATIVE LOCATION OF TERMINALS IS SHOWN BELOW.
3. DIODE PER SM-B-181092.
4. ▭ INDICATES EQUIPMENT MARKING.

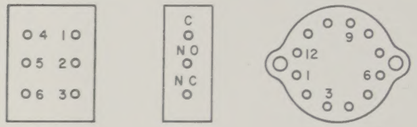

S1		
POS	CONTACT	FUNCTION
1	1 – 12	+300V
2	2 – 12	+150V
3	3 – 12	+75V
4	4 – 12	0-30V TEST
5	5 – 12	-20V
6	6 – 12	+4.5V
7	7 – 12	-REF
8	8 – 12	+REF
9	9 – 12	-300V
10	10 – 12	XMTR SIG LVL
11	11 – 12	

HIGHEST REFERENCE DESIGNATION	
R12	CR1

Figure 179.1. (Added) Electrical test panel SB-976A/TSQ-36, schematic diagram.

TM5840-219-35-C2-18

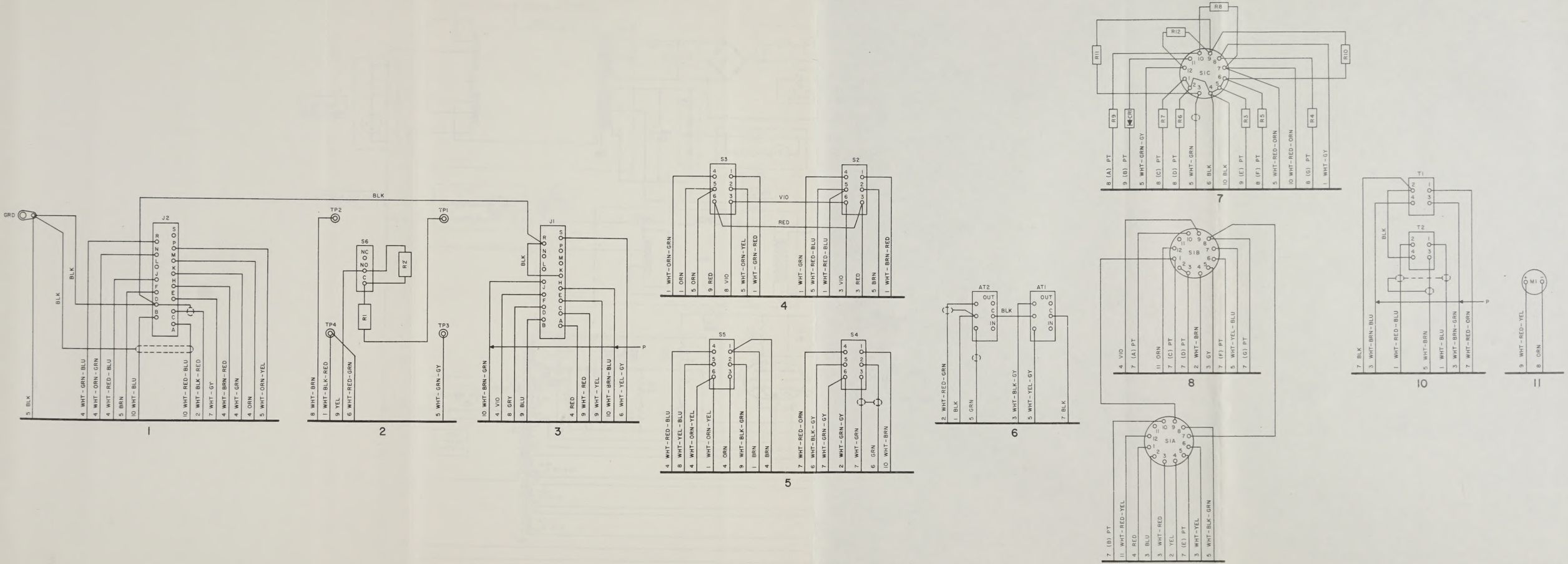

Figure 180.1. (Added) Electrical test panel SB-976A/TSQ-36, wiring diagram.

TM840-219-35-C2-19

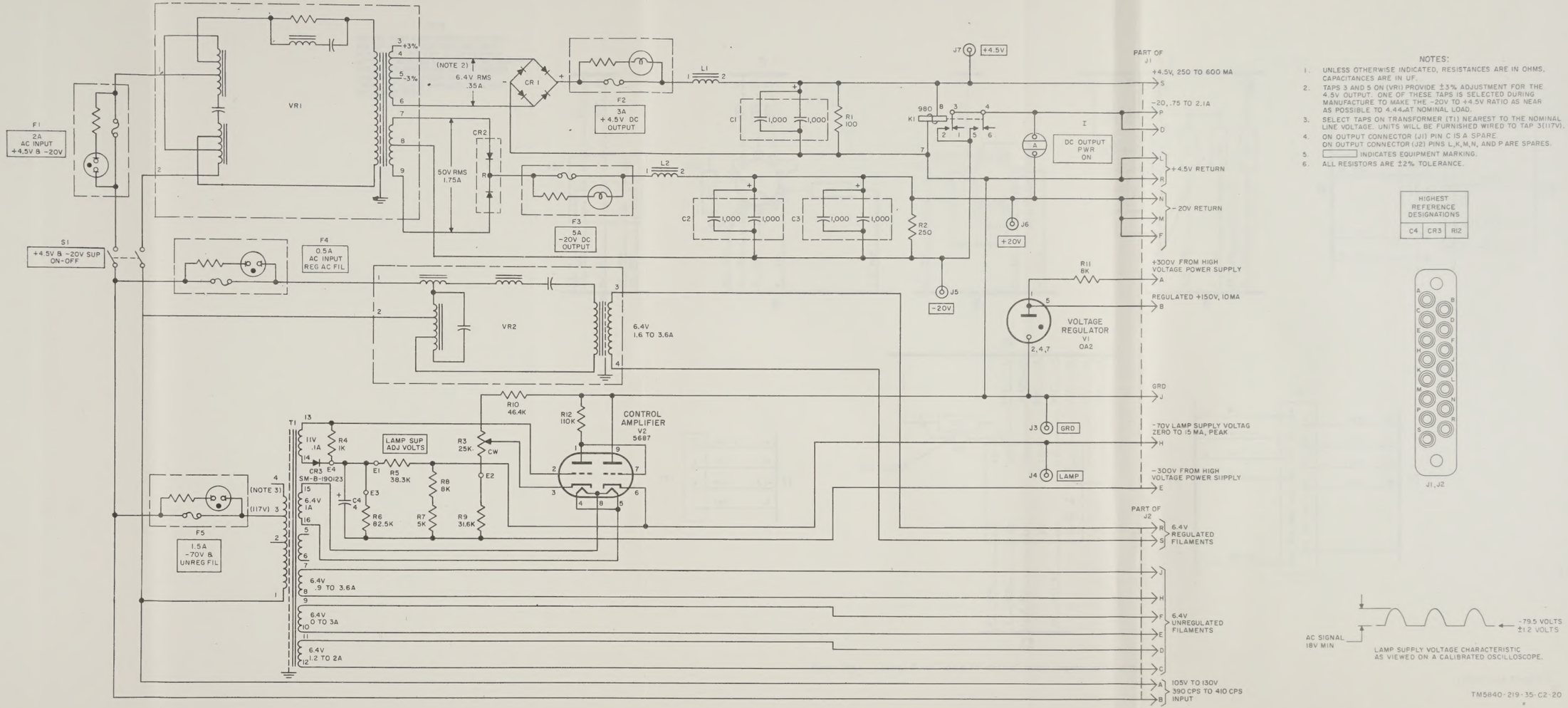
NOTES:
1. UNLESS OTHERWISE INDICATED, RESISTANCES ARE IN OHMS, CAPACITANCES ARE IN UF.
2. TAPS 3 AND 5 ON (VR1) PROVIDE ±3% ADJUSTMENT FOR THE 4.5V OUTPUT. ONE OF THESE TAPS IS SELECTED DURING MANUFACTURE TO MAKE THE -20V TO +4.5V RATIO AS NEAR AS POSSIBLE TO 4.44 AT NOMINAL LOAD.
3. SELECT TAPS ON TRANSFORMER (T1) NEAREST TO THE NOMINAL LINE VOLTAGE. UNITS WILL BE FURNISHED WIRED TO TAP 3(117V).
4. ON OUTPUT CONNECTOR (J1) PIN C IS A SPARE. ON OUTPUT CONNECTOR (J2) PINS L,K,M,N, AND P ARE SPARES.
5. [ ] INDICATES EQUIPMENT MARKING.
6. ALL RESISTORS ARE ±2% TOLERANCE.
HIGHEST REFERENCE DESIGNATIONS
C4 CR3 RI2
F1 2A AC INPUT +4.5V & -20V
S1 +4.5V & -20V SUP ON-OFF
VR1
VR2
6.4V 1.6 TO 3.6A
F2 3A +4.5V DC OUTPUT
F3 5A -20V DC OUTPUT
F4 0.5A AC INPUT REG AC FIL
F5 1.5A -70V & UNREG FIL
CR1
CR2
CR3 SM-B-190123
L1
L2
T1
C1 1,000 1,000
C2 1,000 1,000
C3 1,000 1,000
C4 4
R1 100
R2 250
R3 25K CW
R4 1K
R5 38.3K
R6 82.5K
R7 5K
R8 8K
R9 31.6K
R10 46.4K
R11 8K
R12 110K
K1
CONTROL AMPLIFIER V2 5687
VOLTAGE REGULATOR V1 0A2
LAMP SUP ADJ VOLTS
DC OUTPUT PWR ON
J1, J2
PART OF J1
+4.5V, 250 TO 600 MA
-20, .75 TO 2.1A
+4.5V RETURN
-20V RETURN
+300V FROM HIGH VOLTAGE POWER SUPPLY
REGULATED +150V, 10MA
GRD
-70V LAMP SUPPLY VOLTAG ZERO TO 15 MA, PEAK
-300V FROM HIGH VOLTAGE POWER SUPPLY
PART OF J2
6.4V REGULATED FILAMENTS
6.4V UNREGULATED FILAMENTS
105V TO 130V 390 CPS TO 410 CPS INPUT
+79.5 VOLTS ±1.2 VOLTS
AC SIGNAL 18V MIN
LAMP SUPPLY VOLTAGE CHARACTERISTIC AS VIEWED ON A CALIBRATED OSCILLOSCOPE.
TM5840-219-35-C2-20

Figure 181.1. (Added) Power supply PP–2517/G, schematic diagram.

NOTE:

PROVIDE HEAT SINK BETWEEN CR3 AND SOLDER POINTS. THE HEAT SINK MUST REMAIN IN PLACE FOR A FEW SECONDS AFTER SOLDER HAS SOLIDIFIED. THE UNIT SHOULD BE PROTECTED AGAINST SUDDEN THERMAL SHOCK WHICH MAY RESULT FROM THE CLOSE APPROACH OF A HOT SOLDERING IRON.

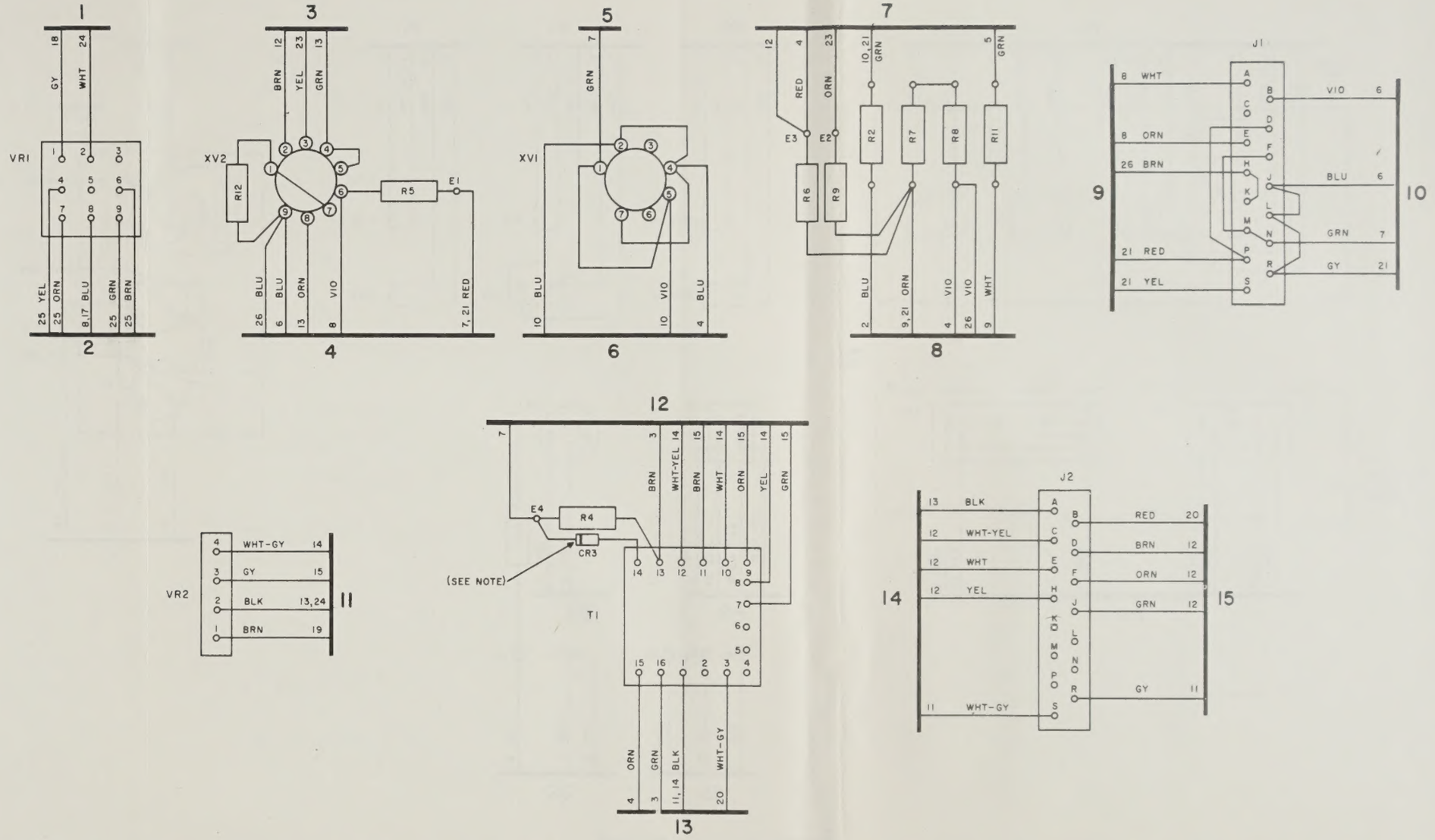

Figure 182.1. (Added) Power supply PP-2517/G, wiring diagram, part 1 of 2.

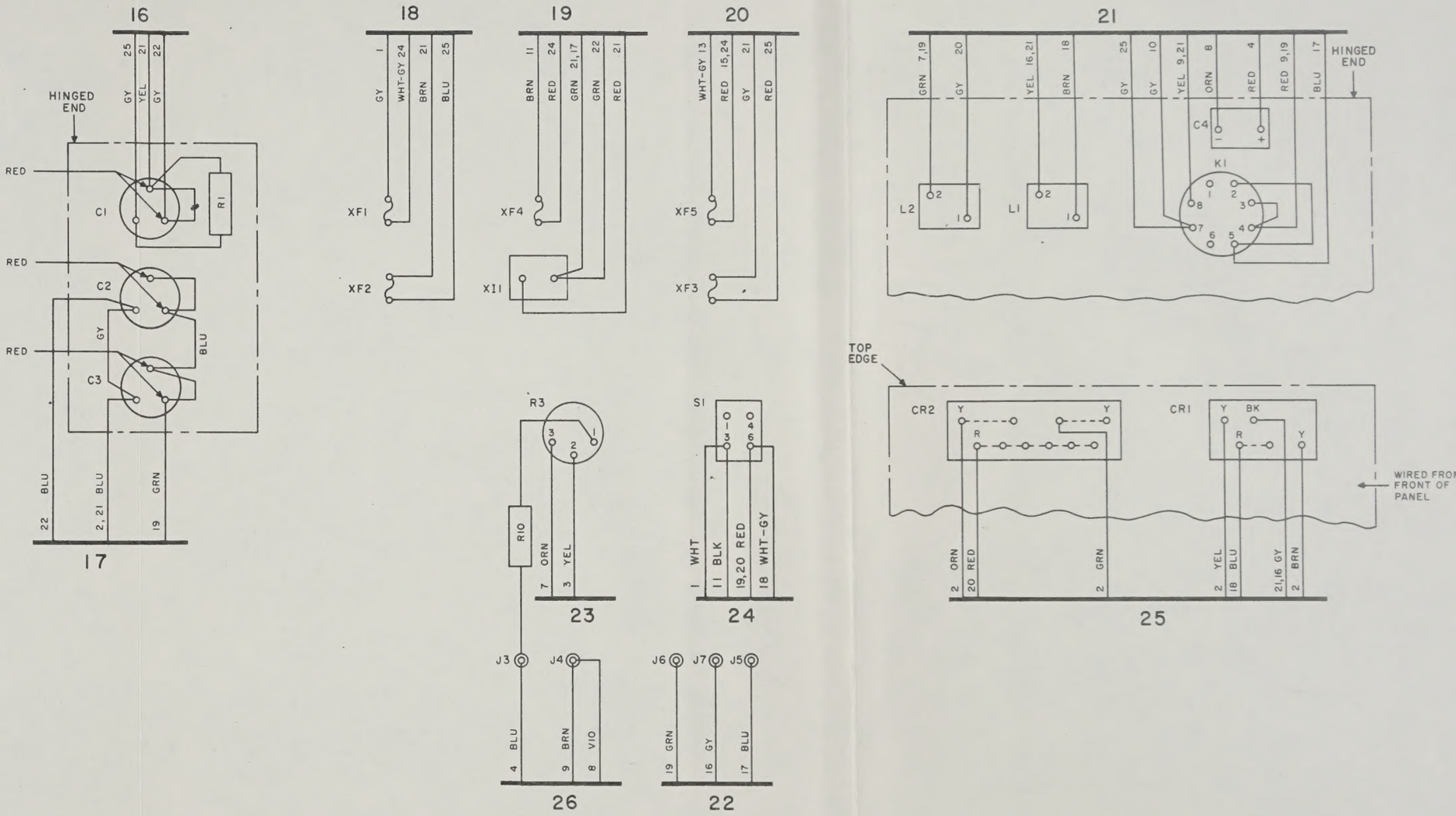

Figure 182.1. continued, *part 2 of 2*

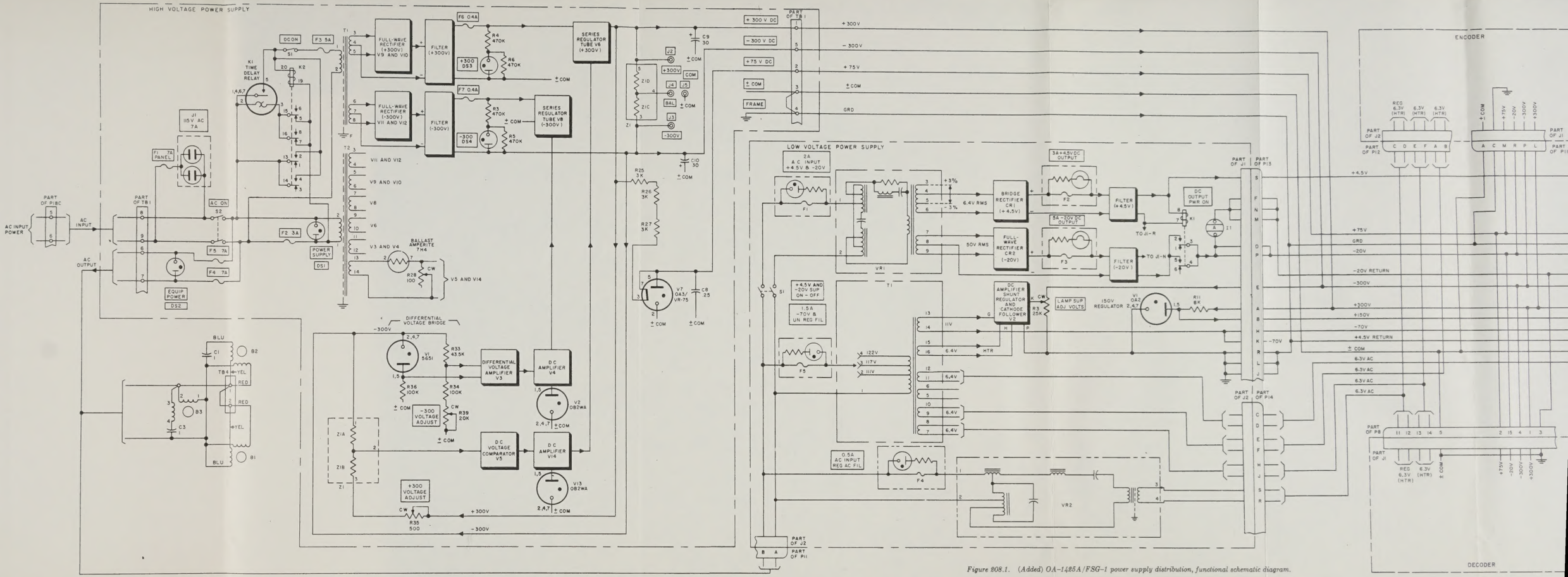

Figure 208.1. (Added) OA-1425A/FSG-1 power supply distribution, functional schematic diagram.

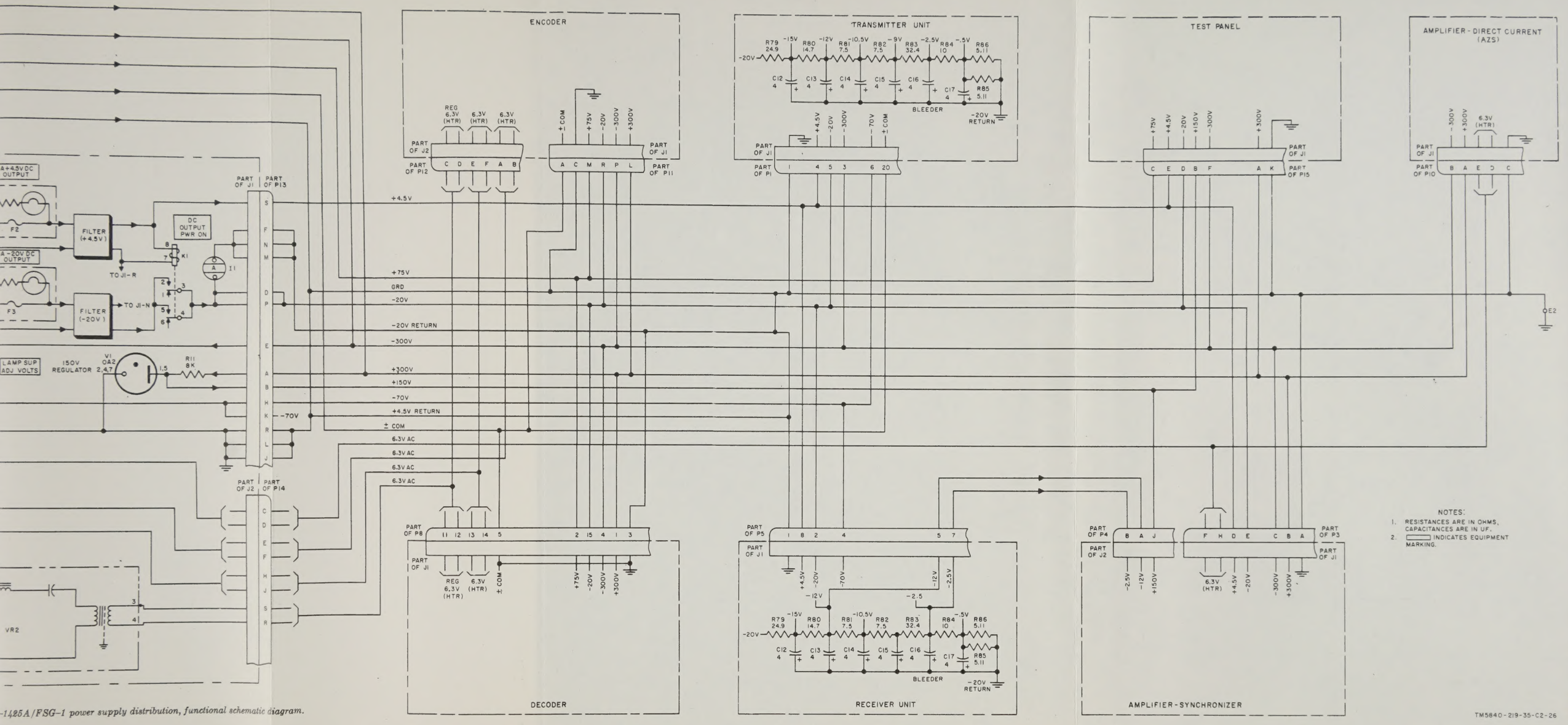

-1425A/FSG-1 power supply distribution, functional schematic diagram.

TECHNICAL MANUAL

FIELD AND DEPOT MAINTENANCE

COORDINATE DATA SETS AN/TSQ-36 AND AN/TSQ-36A, AND COORDINATE DATA SET GROUP OA-1425A/FSG-1

Return to: Educational Development Br
MOS Library
Bldg 401
Fort Knox, Kentucky 40121

TM 11-5840-219-35
CHANGES No. 3

HEADQUARTERS,
DEPARTMENT OF THE ARMY
WASHINGTON 25, D. C., *11 September 1961*

TM 11-5840-219-35, 27 April 1959, is changed as follows so that the manual also applies to the following equipment:

Nomenclature	*Order No.*
Coordinate Data Set AN/TSQ-36A	9337-PP-60-54-54

The title of the manual is changed as shown above.

Note. Parenthetical reference to previous changes (example: "page 1 of C 2") indicates that pertinent material was published in those changes.

Change tube type "5687" to "5687WA" in the following places:

Page 78, figure 40.
Page 113, figure 57.
Page 117, figure 61.
Page 118, figure 62.
Page 187, figure 125.
Page 328, figure 164, sheet 2 (5 places).
Page 331, figure 173.
Page 333, figures 181, and 181.1 (fold-in illustration, C 2).

Change tube type "6AU6" to 6AU6WB in the following places:

Page 73, figure 35.
Page 74, figure 36.
Page 113, figure 57.
Page 187, figure 125.
Page 328, figure 164 (3 places).
Page 331, figure 173.
Page 334, figure 184 (2 places).

Add "C3, 66 UFF" between terminals 6 and 9 of the D packages in the figures listed below—

Page 259, figure 133.
Page 299, figure 145.
Page 328, figure 163(1).
Page 331, figure 170(1).
figure 172(1).

Page 2 (page 3 of C 2). Add figure 1.2 after figure 1.1.

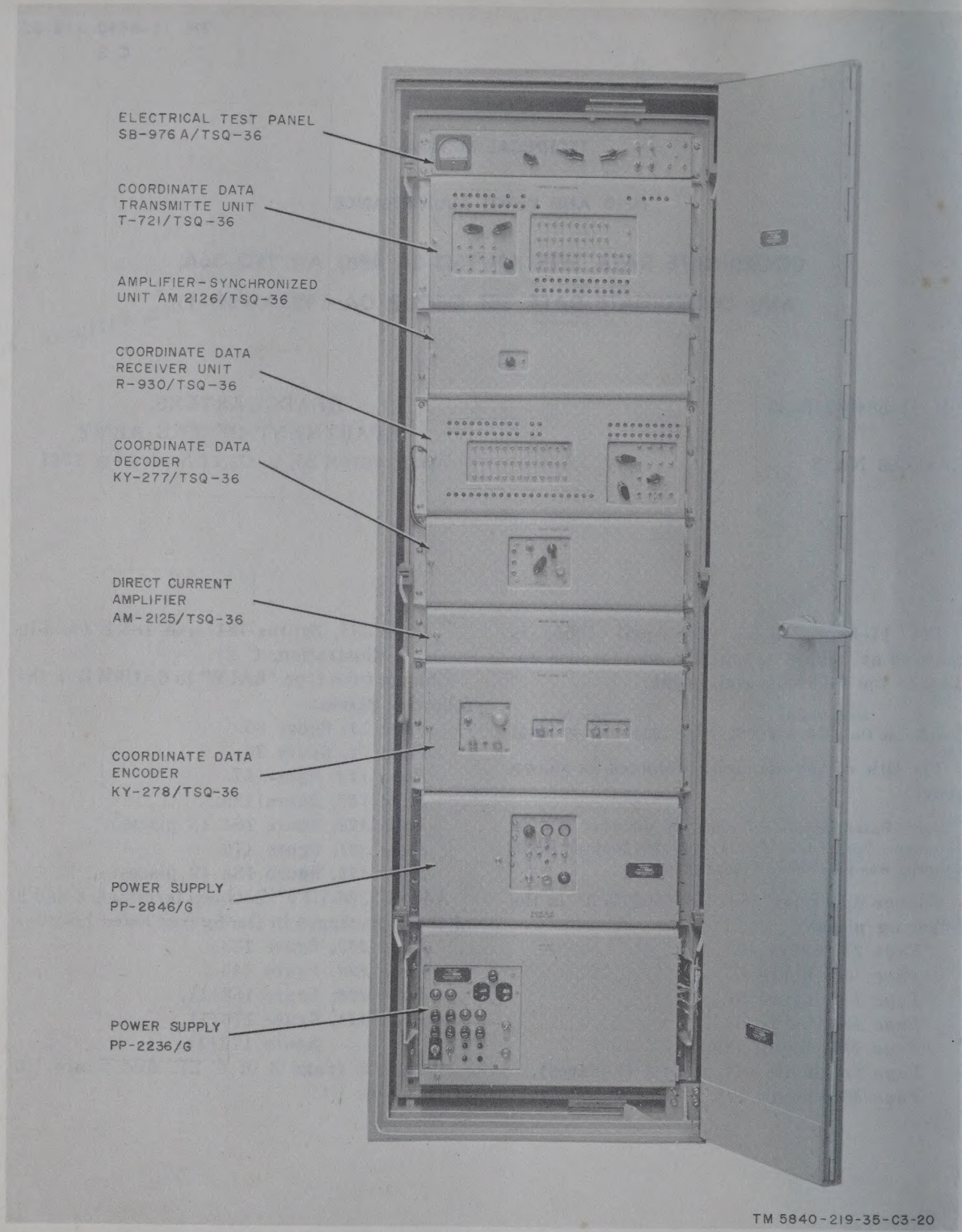

Figure 1.2. Coordinate Data Set AN/TSQ-36A.

Page 3, paragraph 1. Make the following changes:

Subparagraph *b*. Delete the second sentence and substitute: Details regarding the applications of the equipment in the AN/MSQ–18 system are covered in TM 11–5895–263–34/1, TM 11–5895–263–34/2, TM 11–5895–258–20, TM 11–5895–257–20/1, and TM 11–5895–257–20/2.

Subparagraph *c*, line 2. Change the address to: Commanding Officer, U.S. Army Signal Materiel Support Agency, ATTN: SIGMS–PA2d, Fort Monmouth, N. J.

Paragraph 2*a*, line 3. Change the address to: Commanding Officer, U.S. Army Signal Materiel Support Agency, ATTN: SIGMS–MLM, Fort Monmouth, N. J.

Page 5, paragraph 5*b*. Make the following changes:

Line 2. After "Frequency," add: (AN/TSQ –36).

After line 2, add: Frequency (AN/TSQ –36A) ..... 50-through 420-cycle, single-phase.

Page 6, paragraph 6*d* (page 2 of C 2). Change the heading to: **Ventilation (AN/TSQ–36 and AN/TSQ–36A).**

Paragraph 7 (page 2 of C 2). Change the first sentence to: **The common name assignments are used for Coordinate Data Sets AN/TSQ–36 and AN/TSQ–36A, and Coordinate Data Set Group OA–1425A/FSG–1 because of their similarity.**

Paragraph 7*a*. Make the following changes:

Common name column. After "Low voltage power supply," add: (AN/TSQ–36). Add the following entry after "Low voltage power supply (AN/TSQ–36)": Low voltage power supply (AN/TSQ –36A). *Nomenclature column.* Add the following entry after "Power Supply PP–2235/G": Power Supply PP–2846 /G.

Paragraph 7*b* (page 2 of C 2), description column. Change "(and fig. 1.1)" to: **(figs. 1.1, and 1.2).**

Paragraph 8 (page 4 of C 2). Delete the paragraph heading and substitute: **Description of Coordinate Data Sets AN/TSQ–36, AN/TSQ–36A, and Coordinate Data Set Group OA–1425A /FSG–1.**

Page 7 (page 4 of C 2). Add figure 5.2 after figure 5.1.

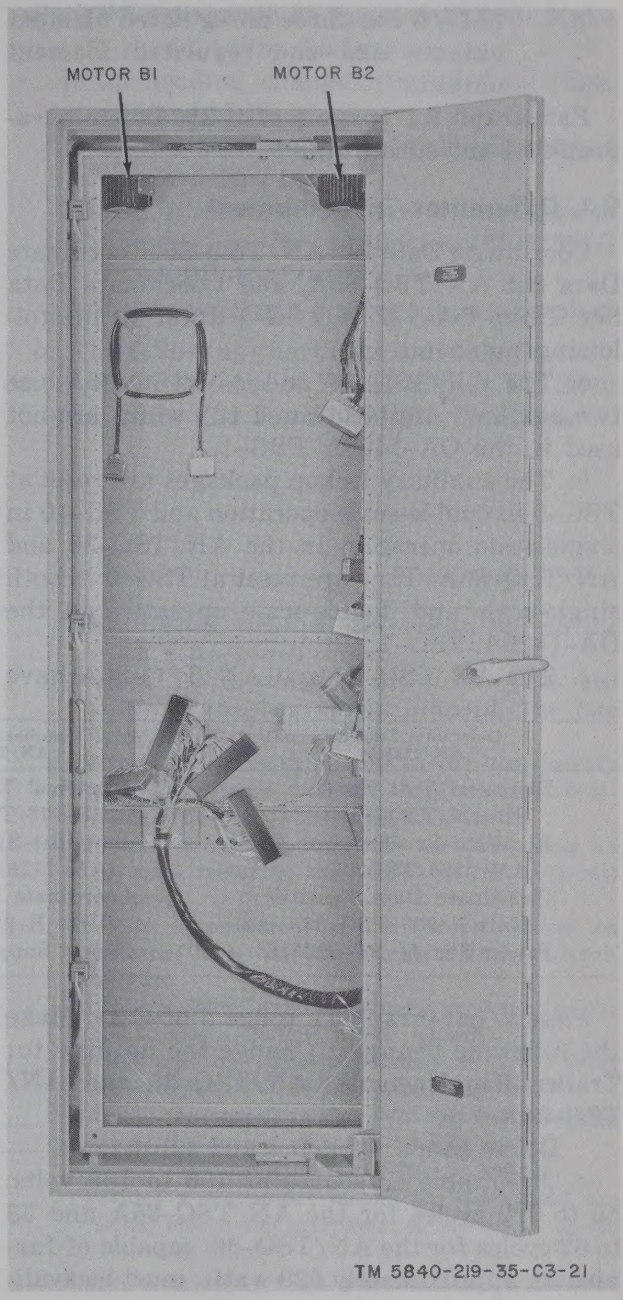

Figure 5.2. Electrical equipment cabinet for Coordinate Data Set AN/TSQ–36A.

Page 8, paragraph 8*i* (page 4 of C 2). Make the following changes:

Heading. Change the heading to: **Power Supplies PP–2235/G, PP–2517/G, and PP–2846/G.**

Line 6. Delete the third sentence and substitute: **Power Supplies PP–2235/G and PP–2846/G have four unregulated filament outputs. Power Supply PP–2517/G has three unregulated filament outputs and one regulated filament output.**

Paragraph 9.1 (page 4 of C 2). Delete paragraph 9.1 and substitute:

9.1 Differences in Equipment

Coordinate Data Set AN/TSQ–36, Coordinate Data Set AN/TSQ–36A, and Coordinate Data Set Group OA–1425A/FSG–1 differ in the following manner:

a. The AN/TSQ–36 and AN/TSQ–36A use two auxiliary digits (11 and 12) which are not used in the OA–1425A/FSG–1.

b. The auxiliary lockup packages are reset at TSG–0 in double-scale operation and TSG–10 in single-scale operation in the AN/TSQ–36 and AN/TSQ–36A. They are reset at TSG–0 in both single-scale and double-scale operation in the OA–1425A/FSG–1.

c. The AN/TSQ–36 and AN/TSQ–36A have one common return for all auxiliary relays. The OA–1425A/FSG–1 uses three returns for various combinations of the 10 auxiliary relays.

d. The AN/TSQ–36 and AN/TSQ–36A have provisions for OC–CDG/TAC modes of operation. The OA–1425A/FSG–1 has only the CDG/TAC mode of operation.

e. A 60-cycle ac low voltage power supply is used in the AN/TSQ–36, a 50- to 420-cycle ac low voltage power supply is used in the AN/TSQ–36A, and a 400-cycle ac low voltage power supply is used in the OA–1425A/FSG–1.

f. The cabinet differences are shown in figures 5, 5.1, and 5.2.

g. The units that are not common to these equipments are listed in the chart below. The units listed in the opposing columns perform identical functions although none of the units, except the power supplies, are interchangeable. Power Supply PP–2235/G and Power Supply PP–2517/G are not mutually interchangeable, but Power Supply PP–2846/G may be used to replace Power Supply PP–2235/G or Power Supply PP–2517/G.

Coordinate Data Set AN/TSQ–36	Coordinate Data Set AN/TSQ–36A	Coordinate Data Set Group OA–1425A/FSG–1
Electrical Test Panel SB–976/TSQ–36.	Electrical Test Panel SB–976/TSQ–36.	Electrical Test Panel SB–976A/TSQ–36.
Amplifier-Synchronizer Unit AM–2126/TSQ–36.	Amplifier-Synchronizer Unit AM–2126/TSQ–36.	Amplifier-Synchronizer Unit AM–2450/FSG–1.
Coordinate Data Receiver Unit R–930/TSQ–36.	Coordinate Data Receiver Unit R–930/TSQ–36.	Coordinate Data Receiver R–975/FSG–1.
Power Supply PP–2235/G.	Power Supply PP–2846/G.	Power Supply PP–2517/G.

Page 9, paragraph 11 (page 5 of C 2). Make the following changes: Change the heading to: **Trailer Requirements, AN/TSQ–36 and AN/TSQ–36A.**

Delete subparagraph *c* and substitute:

c. A suitable ac source of 105 to 130 volts, 50 to 420 cycles for the AN/TSQ–36A and 58 to 62 cycles for the AN/TSQ–36, capable of furnishing approximately 620 watts, must be available. A system ground connection near the operating location of the cabinet is required.

Page 11, paragraph 14*a.1* (page 5 of C 2). Change the heading of subparagraph *a.1* to: **General (OA–1425A/FSG–1 and AN/TSQ–36A).**

Paragraph 16 (page 5 of C 2). Change the heading to:

Installation of Coordinate Data Sets AN/TSQ–36 and AN/TSQ–36A.

Page 12, table I. Make the following changes:

Tube type column. Change "5687" to **5687WA** and "6AU6" to **6AU6WB.**

Encoder column. Change "(fig. 137)" to: **(fig. 135).**

Amplifier synchronizer column. Change "(fig. 143)" to: **(fig. 141).**

Decoder column. Change "(fig. 138)" to: **(fig. 136).**

Automatic zero set column. Change "(fig. 145)" to: **(fig. 143).**

Low voltage power supply column. Change "(fig. 154)" to: **(fig. 152).**

High voltage power supply column. Change "(fig. 136)" to: **(fig. 134).**

Page 13, paragraph 19. Change the heading to: **Preliminary Connections for Coordinate Data Sets AN/TSQ–36 and AN/TSQ–36A.**

Page 16, table IV. Make the following changes in step 2: unit column. Change "(fig. 15)" to: **(figs. 15, 15.1, and 15.2).**

Add the following entries in step 2: Control column, add: RESET (in PP–2846 /G only).

Function column, opposite RESET, add: Resets +4.5-volt and —20-volt output after a short-circuit overload.

Method of setting column opposite "RESET" add: If a short-circuit overload has disabled the +4.5-volt and —20-volt outputs, clear the short circuit and depress the RESET switch to restore low voltage output.

Page 27, figure 9, caption. Change the caption to: **Coordinate Data Transmitter Unit T–721/TSQ–36.**

Page 37, paragraph 35 (page 8 of C 2). Make the following changes:

In the heading, change "(fig. 15)" to: **(figs. 15 and 15.1).**

Add the designation *"a"* at the beginning of the existing text.

In line 1, change "the low voltage power supply" to: **Power Supplies PP–2235/G and PP–2517/G.**

Add subparagraph *b* after subparagraph *a*.

b. The following chart lists the controls, indicators, and test jacks of Power Supply PP–2846 /G (fig. 15.2) and describes their functions:

Item	Position	Function
+4.5V & —20V PWR ON lamp		When lighted, indicates the presence of both the +4.5- and —20-volt outputs.
2A FN AC INPUT +4.5 & —20V fuse.		Protects the primary circuit of the +4.5- and —20-volt rectifiers against overload. The fuse is rated at 2 amperes.
1.5 FN AC INPUT LAMP & UNREG FIL fuse.		Protects the primary circuits of the lamp supply and unregulated filament supply against overloads. The fuse is rated at 1.5 amperes.
—20V DC OUTPUT test jack		Provides a convenient means for connecting an external meter to the output of the —20-volt supply.
+4.5V DC OUTPUT and GRD test jacks.		Provide a convenient means for connecting an external meter to the output of the +4.5-volt supply.
+4.5V and —20V SUP ON-OFF switch.	ON	In this position, applies primary ac power to the +4.5- and —20-volt power supplies.
	OFF	In this position, removes primary ac power from the +4.5- and —20-volt power supplies.
LAMP SUP ADJ VOLTS knob		Adjusts the output of the —70-volt lamp supply.
+4.5V ADJ		Adjusts the output of the +4.5-volt supply.
—20V ADJ		Adjusts the output of the —20-volt supply.
LAMP SUP TEST test jack		Provides a convenient means for connecting external measuring equipment to the output of the —70-volt supply.
RESET switch		Depressing this switch restores the low voltage power supply to normal operation following a temporary short-circuit overload.

Page 38 (page 9 of C 2). Add figure 15.2 after figure 15.1.

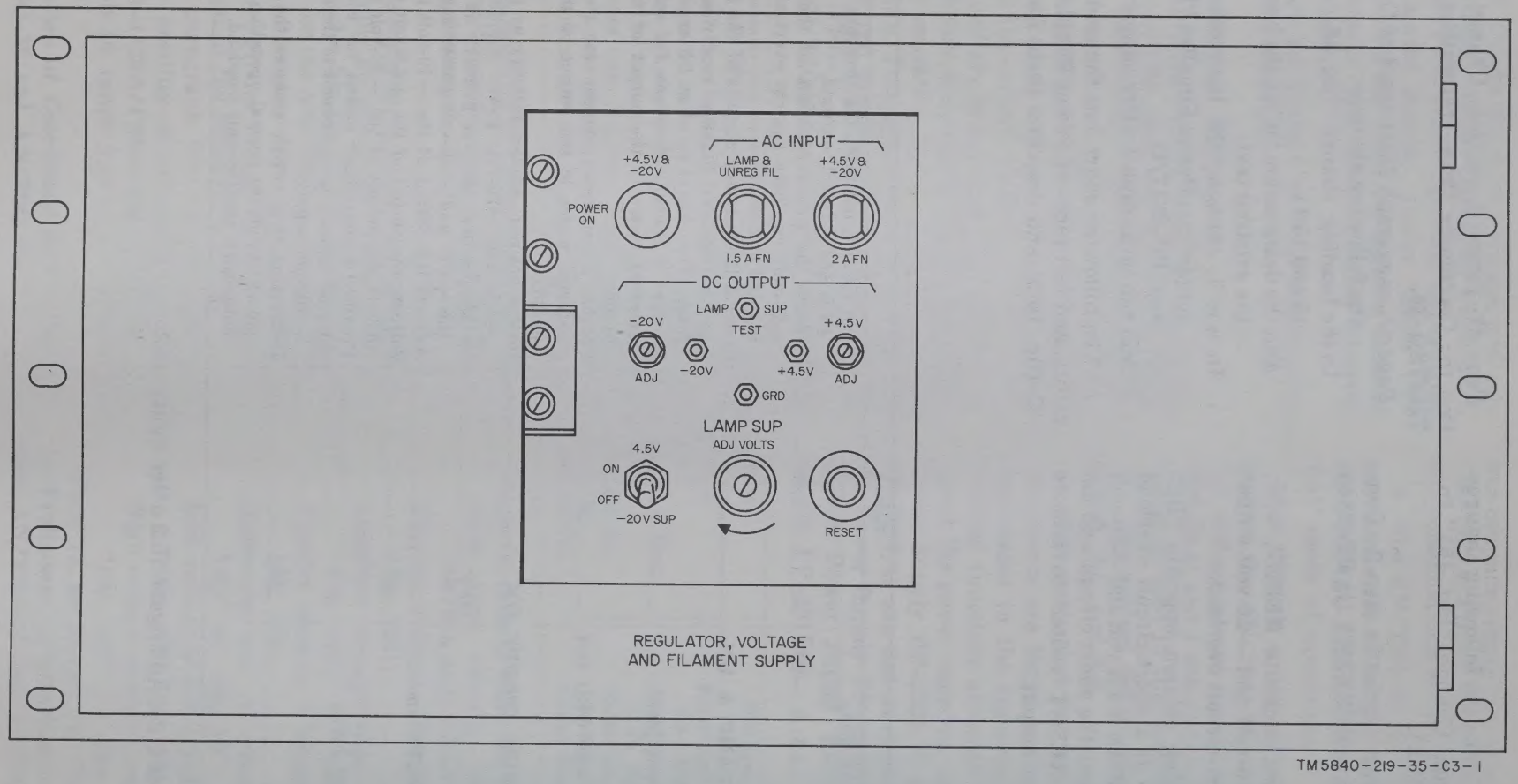

Figure 15.2. Power Supply PP–2846/G, controls.

Page 49, table V, remarks column, line 11. After "lamps," add: On Power Supply PP–2846/G (fig. 15.2), check for short-circuit overload by depressing RESET switch (par. 35).

Page 53, paragraph 56 (page 10 of C 2). Make the following changes:

Heading. Change the figure references to: **(figs. 21, 21.1, and 21.2).**

Subparagraph *a*, line 1. Add the following before "Both": In Power Supplies PP–2235/G and PP–2517/G.

Add subparagraph *a.1* after subparagraph *a:*

a.1. In Power Supply PP–2846/G (fig. 21.2) the ac line voltage for the +4.5-volt supply is stepped down by power transformer T1 and rectified by a bridge-type selenium rectifier. The rectifier output voltage is regulated by a series voltage regulating transistor. The collector-to-emitter resistance of the voltage regulating transistor, and consequently, the output voltage of the +4.5-volt supply, are controlled by a transistor two-stage control amplifier. The control amplifier in turn is controlled by a temperature-sensing transistor amplifier. Any ambient temperature changes affect circuits in the transistor amplifier and cause changes in the output voltage of the +4.5-volt supply; a drop in temperature causes a drop in output voltage, and a rise in temperature causes a rise in output voltage.

Subparagraph *b*, line 1. Add the following before "The": In Power Supplies PP–2235/G and PP–2517/G.

Add subparagraphs *b*.1 and *b*.2 after subparagraph *b:*

b.1. In Power Supply PP–2846/G, the —20-volt supply is essentially the same as the +4.5-volt supply except that no temperature sensing element is used, and three parallel-connected transistors are used as the series voltage regulating element.

b.2. In Power Supply PP–2846/G, the +4.5-volt supply and the —20-volt supply are associated with a common short-circuit protection (par. 81.3) and a tracking circuit (par. 79.1*c*). A change in voltage of the —20-volt supply results in a corresponding change in the same direction in the +4.5-volt supply. A short circuit on either the —20-volt or +4.5-volt output, or both, results in both outputs being reduced to nearly 0 volt without damage to any components. Operation of the RESET switch restores the two supplies to normal after the short circuit has been cleared.

Page 54 (page 11 of C 2). Add figure 21.2 after figure 21.1.

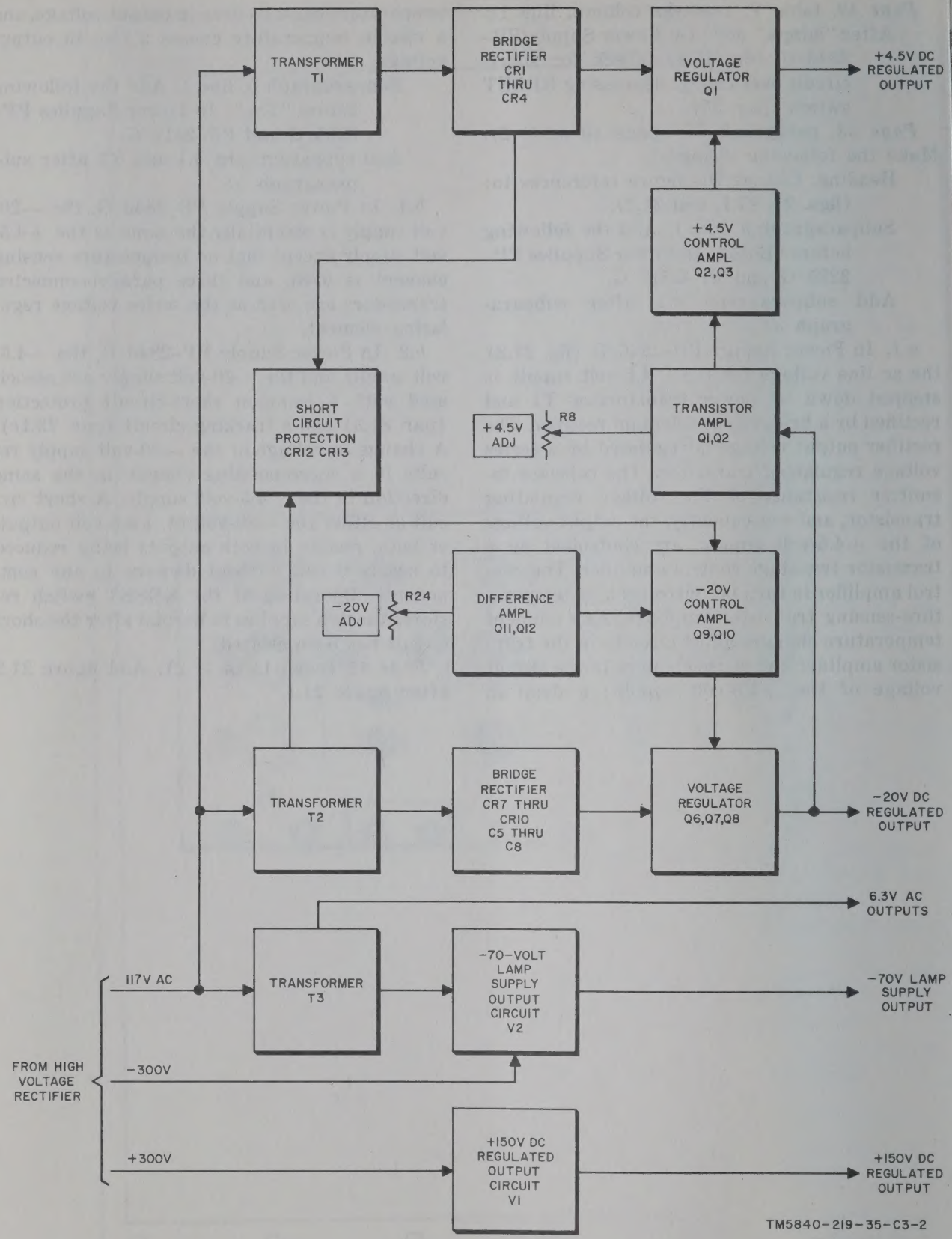

Figure 21.2. Power Supply PP-2846/G, block diagram.

Page 70, paragraph 69 (page 10 of C 2). After "OA–1425A/FSG–1," add:

In the AN/TSQ–36A, 117 volts, 50 through 420 cycles, may be used.

Paragraph 71 (page 10 of C 2). Change the second sentence to: **Low-voltage Power Supplies PP–2235/G and PP–2846/G have four unregulated 6.4-volt ac outputs. Power Supply PP–2517/G has three unregulated and one regulated 6.4-volt ac outputs.**

Page 75, paragraph 78, Heading. After "VR1" add: **in Power Supplies PP–2235/G and PP–2517/G.**

Page 76 (page 13 of C 2). Add figures 37.2 and 37.3 after figure 37.1.

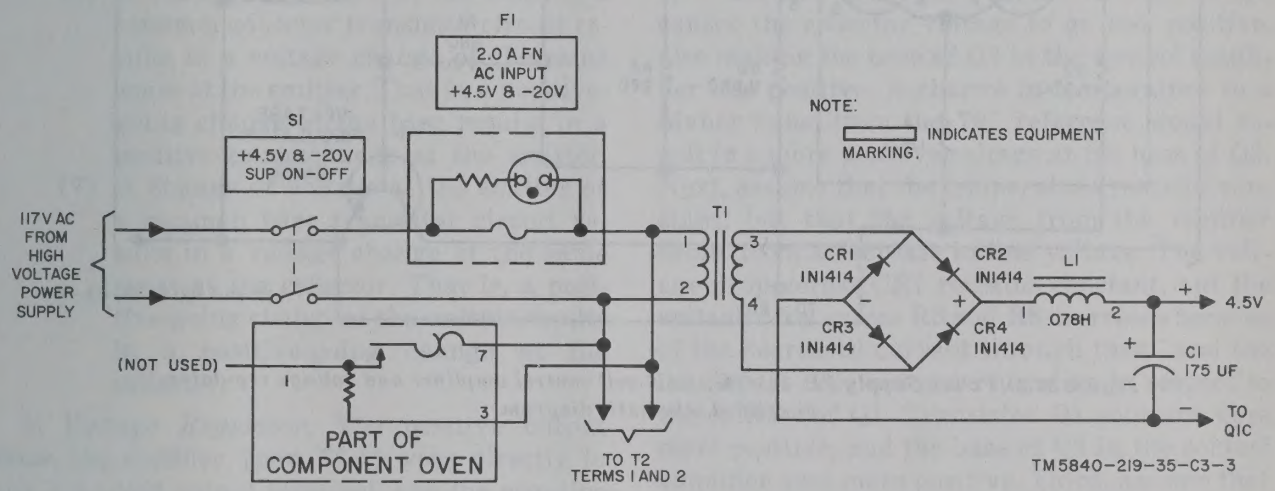

Figure 37.2. Power Supply PP–2846/G, +4.5-volt rectifier, simplified schematic diagram.

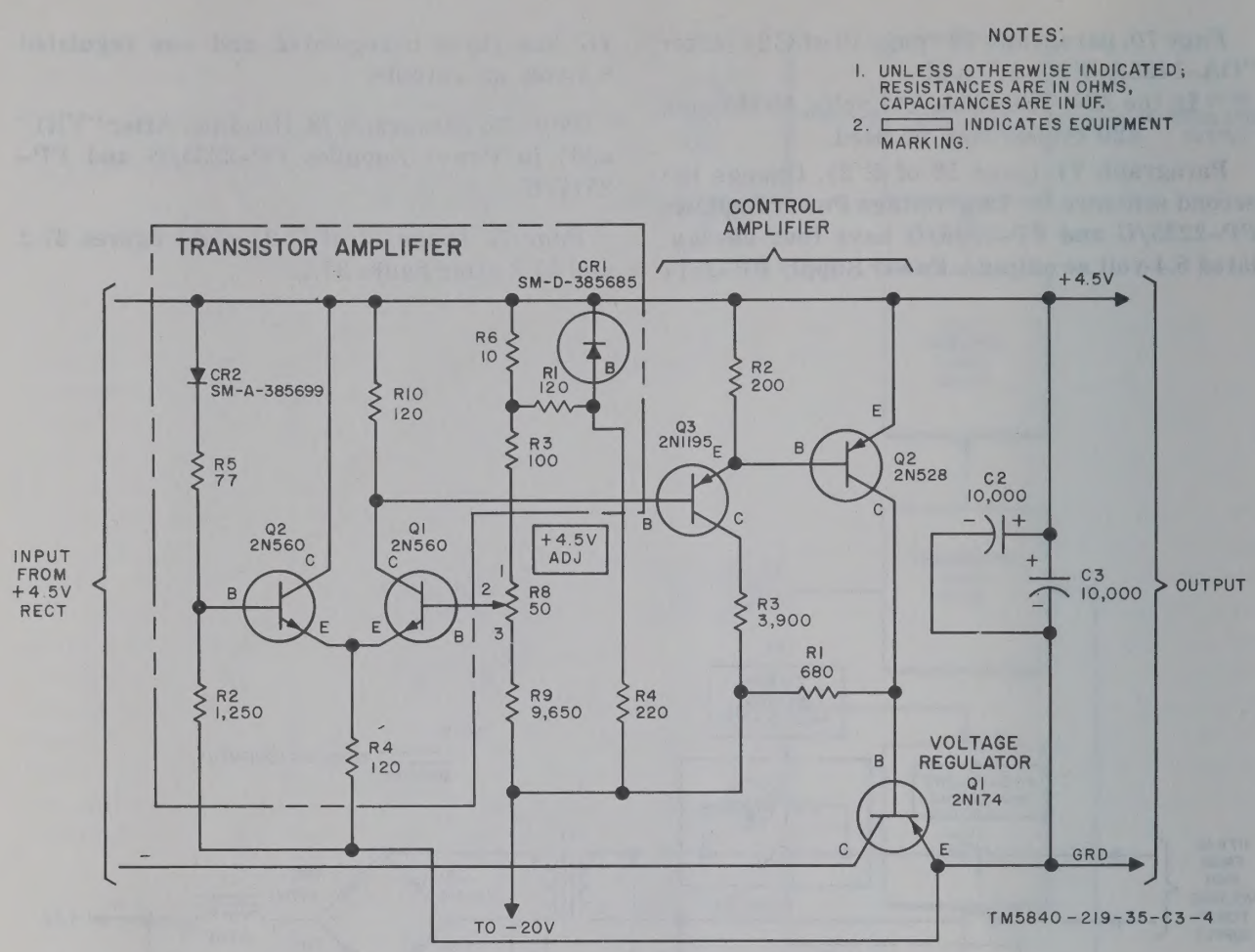

Figure 37.3. Power Supply PP–2846/G, +4.5-volt control amplifier and voltage regulator simplified schematic diagram.

Page 77. Add paragraphs 78.1 and 78.2 after paragraph 78:

78.1 Plus 4.5-Volt Rectifier and Filter in Power Supply PP–2846/G

(fig. 37.2)

Primary power is applied to transformer T1 through switch S1 and fuse F1. The line voltage is stepped down by T1 to about 11.5 volts. This voltage is applied to bridge rectifier CR1 through CR4. Capacitor C12 (not shown), across the secondary winding of T1, filters out ac transients from the +4.5-volt supply. The output from the rectifier is filtered by choke L1 and capacitor C1. Additional filtering is provided by the +4.5-volt voltage regulator (par. 78.2).

78.2 Plus 4.5-Volt Voltage Regulator in Power Supply PP–2846/G

(fig. 37.3)

a. General. It will be helpful in understanding the description of the operation of the transistors and their circuits if the following rules of thumb are kept in mind. Usually it is preferable to refer to current through a transistor junction in describing circuit operation. However, voltage and resistance changes are described here in order to more easily keep track of the direction of change in each of the circuits.

(1) The symbol for a PNP transistor is shown with the emitter arrow pointed toward the base.

(2) The symbol for an NPN transistor is shown with the emitter arrow pointed away from the base.

(3) The collector-to-emitter resistance of a PNP transistor is lowered when the base voltage is made more negative with respect to the emitter voltage.

(4) The collector-to-emitter resistance of an NPN transistor is lowered when the base voltage is made more positive with respect to the emitter voltage.

(5) A change of voltage at the base of a common emitter transistor circuit results in a voltage change of the opposite sense at the collector. That is, a positive-going change at the base results in a negative-going change in the collector.

(6) A change in voltage at the base of a common collector transistor circuit results in a voltage change of the same sense at the emitter. That is, a positive-going change at the base results in a positive-going change at the emitter.

(7) A change of voltage at the emitter of a common base transistor circuit results in a voltage change of the same sense at the collector. That is, a positive-going change at the emitter results in a positive-going change at the collector.

b. Voltage Regulator. The positive output from the rectifier (par. 78.1) goes directly to the +4.5-volt output terminal, and the negative output goes to ground through the collector-to-emitter resistance of voltage regulator Q1. The output voltage from the rectifier appears across the series combination of the load and voltage regulator Q1. The voltage at the output terminals, therefore, is inversely proportional to the voltage drop across Q1. The collector-to-emitter voltage drop of Q1 is controlled by the action of the control amplifier and the transistor amplifier on the base of Q1.

c. Transistor Amplifier. The transistor amplifier, Q1 and Q2, is a differential amplifier so designed that a change in the base voltage at either transistor results in a change in base voltage at Q3 in the control amplifier. Transistor Q1 of the transistor amplifier has its base voltage controlled by the setting of +4.5V ADJ potentiometer R8, and the voltage of the —20-volt supply (par. 80.1). Resistor R4 provides the proper operating current for diode CR1. The base voltage of transistor amplifier transistor Q2 is controlled by the output voltage of the +4.5-volt rectifier and the voltage drop across temperature sensitive diode CR2. The characteristics of diode CR2 are such that the voltage drop across it is relatively high at a low temperature, and relatively low at a high temperature. Assume that R8 has been adjusted so that the output voltage at the +4.5-volt terminal is 4.5 volts at 70° F. At a temperature of 0° F., for example, the resistance of CR2 becomes higher and the base of Q2 becomes less positive because of the smaller voltage drop across R2. The emitter voltage goes more negative because of the voltage drop across emitter resistor R4, making the emitter voltage of Q1 more negative. Negative increase of voltage at the emitter of Q1 causes the collector voltage to go less positive, also making the base of Q3 in the control amplifier less positive. A change in temperature to a higher value than the 70° reference would result in a more positive voltage at the base of Q3. Next, assume that the temperature remains constant, but that the voltage from the rectifier drops from a decrease in line voltage. The voltage drop across CR1 remains constant, but the voltage drop across R3 and R8 decreases because of the decreased current through them, and the base of Q1 becomes more negative in respect to the emitter of Q1. Transistor Q1 collector goes more positive, and the base of Q3 in the control amplifier goes more positive. Third, assume that the temperature and rectifier output voltage remain constant, but either the —20-volt supply changes or R8 is changed. If R8 is rotated so that terminal 2 is nearer terminal 1, or the —20-volt supply drops in voltage, the base of Q1 in the transistor amplifier is made more positive. The collector of Q1 in the transistor amplifier is thus made more negative and the base of Q3 in the control amplifier is more negative.

d. Control Amplifier. A change in voltage in the positive direction at the base of Q2 in the control amplifier causes an increase in output voltage at the 4.5-volt terminals, and a change in voltage in the negative direction at the base of Q2 causes a decrease in output voltage at the 4.5-volt terminals. Assume a temperature drop from 70° F. to 0° F. causes the base of Q3 in the control amplifier to go less positive (*c*

above). The voltage at the emitter of Q3 and the voltage at the base of Q2 go less positive. The collector of Q2 then goes more positive making the base of voltage regulator Q1 more positive. Since a positive change at the base of Q1 causes the collector-to-emitter resistance to increase, the voltage drop across Q1 increases and the 4.5-volt output decreases. Capacitors C2 and C3 provide additional filtering.

Paragraph 79, heading. After "Rectifier," add: in Power Supplies PP–2235/G and PP–2517/G.

Paragraph 80, heading. After "Circuits" add: in Power Supplies PP–2235/G and PP–2517/G.

Figure 38.1 (page 14 of C 2), caption. Change "M4.5-volt" to: +4.5-volt.

Page 78. Add paragraph 80.1 after paragraph 80.

80.1. Minus 20-Volt Rectifier and Filter in Power Supply PP–2846/G
(fig. 39.2)

Primary power is applied to transformer T2 through switch S1 and fuse F1. The line voltage is stepped down by T2 to 34 volts across terminals 3 and 4, and to 3 volts across terminals 5 and 6. The voltage at terminals 5 and 6 is part of the short-circuit protection circuit (par. 81.3). The voltage at terminals 3 and 4 is applied to bridge rectifier CR7 through CR10. Capacitor C13 (not shown), between terminals 3 and 4 of T1, filters out ac transients from the —20-volt supply. The negative side of the rectifier output goes directly to the —20-volt output terminal, and the positive side of the rectifier output goes to series voltage regulator transistors Q6, Q7, and Q8 (fig. 40.1), through R39 and L2. Filtering of the rectified output voltage is obtained by the inductance of L2 and the capacitance of capacitors C5 through C8. Additional capacitance filtering is provided in the —20-volt voltage regulator circuit (par. 81.1). Resistor R39 is a current limiting resistor, and capacitor C4 and resistor R38 are transient and high frequency filter elements. Lamp DS1 is lighted by the —20-volt rectifier output to indicate the presence of the rectified voltage.

(*Page 15* of C 2.) Add figure 39.2 after figure 39.1.

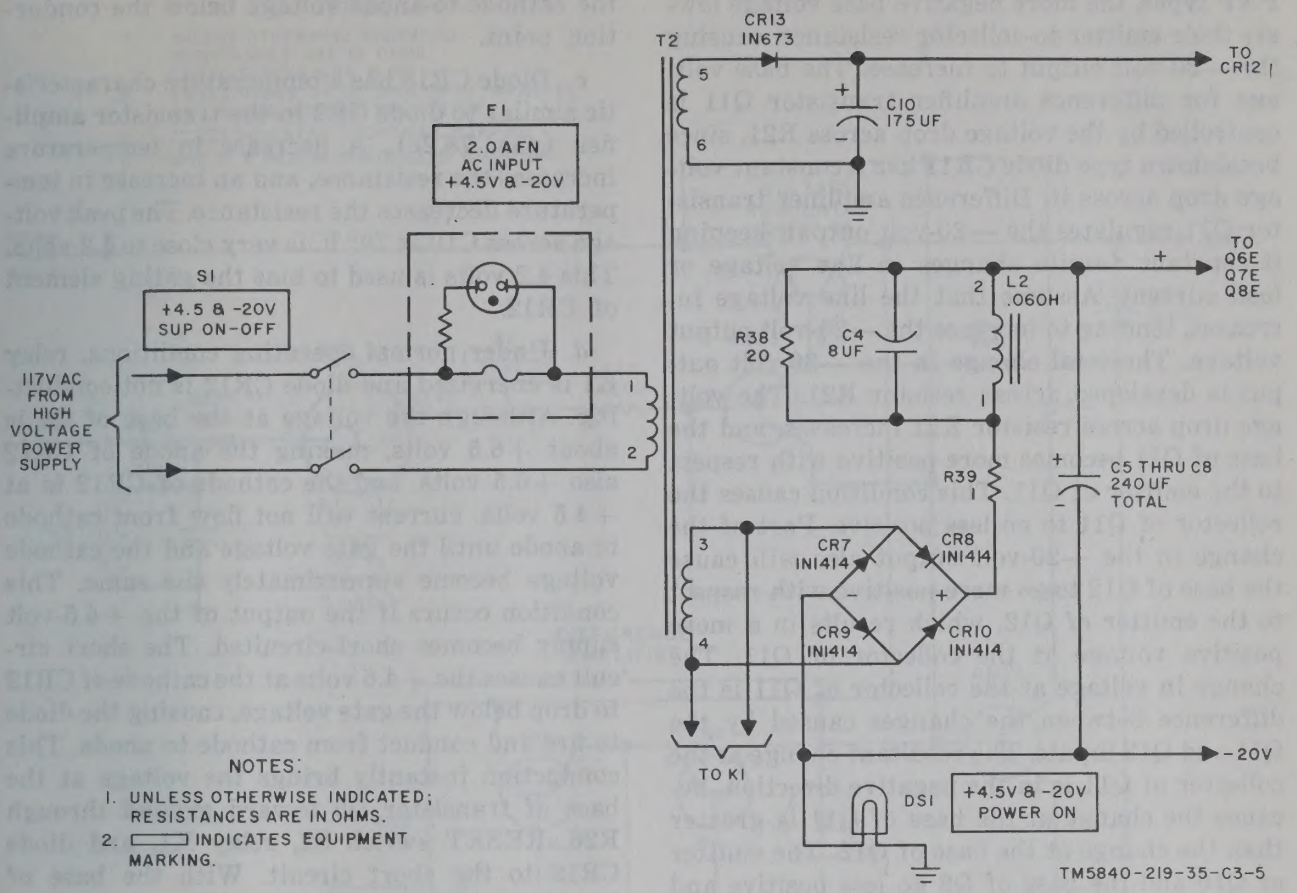

Figure 39.2. Power Supply PP–2846/G, —20-volt rectifier and filter, simplified schematic diagram.

Paragraph 81, Heading. Change "(fig. 40)" to: **(figs. 40 and 181.2).**

Figure 40. Change the caption to: **Power Supplies PP–2235/G and PP–2517/G, —70-volt circuits, simplified schematic diagram.**

Page 79. Add paragraphs 81.1, 81.2, and 81.3 and figure 40.1 after paragraph 81.

81.1. Minus 20-Volt Voltage Regulator in Power Supply PP–2846/G

(fig. 40.1)

The positive output from the rectifier (par. 80.1) is applied to the emitters of voltage regulator transistors Q6, Q7, and Q8, and the positive (ground) output is taken from the collectors. The emitter-to-collector resistance of the three paralleled transistors is controlled by the base voltage. The —20-volt output voltage of the supply is inversely proportional to the resistance of the voltage regulating transistors.

81.2. Difference Amplifier Q11, Q12, and Amplifiers Q9 and Q10 in Power Supply PP–2846/G

(fig. 40.1)

a. Transistors Q11 and Q12 form a difference amplifier. If the base voltage on either transistor is changed, the voltage drop across R20 changes, and the voltage at the bases of the three voltage regulator transistors is changed accordingly through amplifiers Q10 and Q9.

b. The action of —20V ADJ potentiometer R24 is as follows: Assume that the base of transistor Q12 is made more positive. The emitter of Q12 goes positive, the emitter and collector of Q11 go positive, and the base and emitter of Q10 go positive. The base of Q9 thus is made more positive and the collector of Q9 and the bases of Q6, Q7, and Q8 go more negative. Since voltage regulator transistors Q6, Q7, and Q8 are

PNP types, the more negative base voltage lowers their emitter-to-collector resistance, causing the —20-volt output to increase. The base voltage for difference amplifier transistor Q11 is controlled by the voltage drop across R21, since breakdown type diode CR11 has a constant voltage drop across it. Difference amplifier transistor Q11 regulates the —20-volt output, keeping it constant despite changes in line voltage or load current. Assume that the line voltage increases, tending to increase the —20-volt output voltage. The total change in the —20-volt output is developed across resistor R21. The voltage drop across resistor R21 increases, and the base of Q11 becomes more positive with respect to the emitter of Q11. This condition causes the collector of Q11 to go less positive. Part of the change in the —20-volt output also will cause the base of Q12 to go more positive with respect to the emitter of Q12, which results in a more positive voltage at the collector of Q11. The change in voltage at the collector of Q11 is the difference between the changes caused by the Q11 and Q12 inputs. The resultant change at the collector of Q11 is in the negative direction, because the change at the base of Q11 is greater than the change at the base of Q12. The emitter of Q10 and the base of Q9 go less positive and the bases of Q6, Q7, and Q8 go more positive. The increased positive voltage on the bases of these transistors increases their resistance and lowers the output voltage to compensate for the increased line voltage. Additional filtering is provided by capacitor C9.

81.3. Short-Circuit Protection Circuits in Power Supply PP–2846/G
(fig. 40.1)

a. The short-circuit protection circuits consist of diode CR12, thermal relay K1, RESET switch S2, resistor R26, secondary winding 5–6 of transformer T2, diode CR13, and capacitor C10.

b. Diode CR12 is a silicon-controlled rectifier. This type of rectifier has a gating element. This element prevents the flow of current from cathode to anode of the diode when the gate is correctly biased. Once the gate is biased to permit current flow, the gate loses control and conduction of the diode can be stopped only by lowering the cathode-to-anode voltage below the conduction point.

c. Diode CR13 has a temperature characteristic similar to diode CR2 in the transistor amplifier (par. 78.2*c*). A decrease in temperature increases the resistance, and an increase in temperature decreases the resistance. The peak voltage across C10 at 70° F. is very close to 4.2 volts. This 4.2 volts is used to bias the gating element of CR12.

d. Under normal operating conditions, relay K1 is energized and diode CR12 is not conducting. Although the voltage at the base of Q9 is about +6.5 volts, making the anode of CR12 also +6.5 volts, and the cathode of CR12 is at +4.5 volts, current will not flow from cathode to anode until the gate voltage and the cathode voltage become approximately the same. This condition occurs if the output of the +4.5-volt supply becomes short-circuited. The short circuit causes the +4.5 volts at the cathode of CR12 to drop below the gate voltage, causing the diode to fire and conduct from cathode to anode. This conduction instantly brings the voltage at the base of transistor Q9 toward ground through R26, RESET switch S2, relay K1, and diode CR12 to the short circuit. With the base of transistor Q9 at a less positive value than normal, Q9 collector and the bases of Q6, Q7, and Q8 go more positive, increasing the voltage drop across the voltage regulator transistors and reducing the —20-volt output voltage to essentially zero. With the —20-volt output reduced to near 0 volt, the +4.5-volt control amplifier (fig. 37.3) is disabled and the base of +4.5-volt voltage regulator transistor Q1 becomes more positive, increasing its collector-to-emitter resistance, and decreasing the +4.5-volt output to near zero. After the short circuit has been cleared, opening switch S2 removes voltage from the anode of CR12, allowing the gate of CR12 to resume control of diode conduction. Thermal relay K1 prevents the application of voltage to the anode of CR12 before the gate voltage is established at the time the power supply is first turned on. Without this delay, diode CR12 would conduct each time the power supply were turned on, thus necessitating the manual operation of S2 to reset the short-circuit protective circuit.

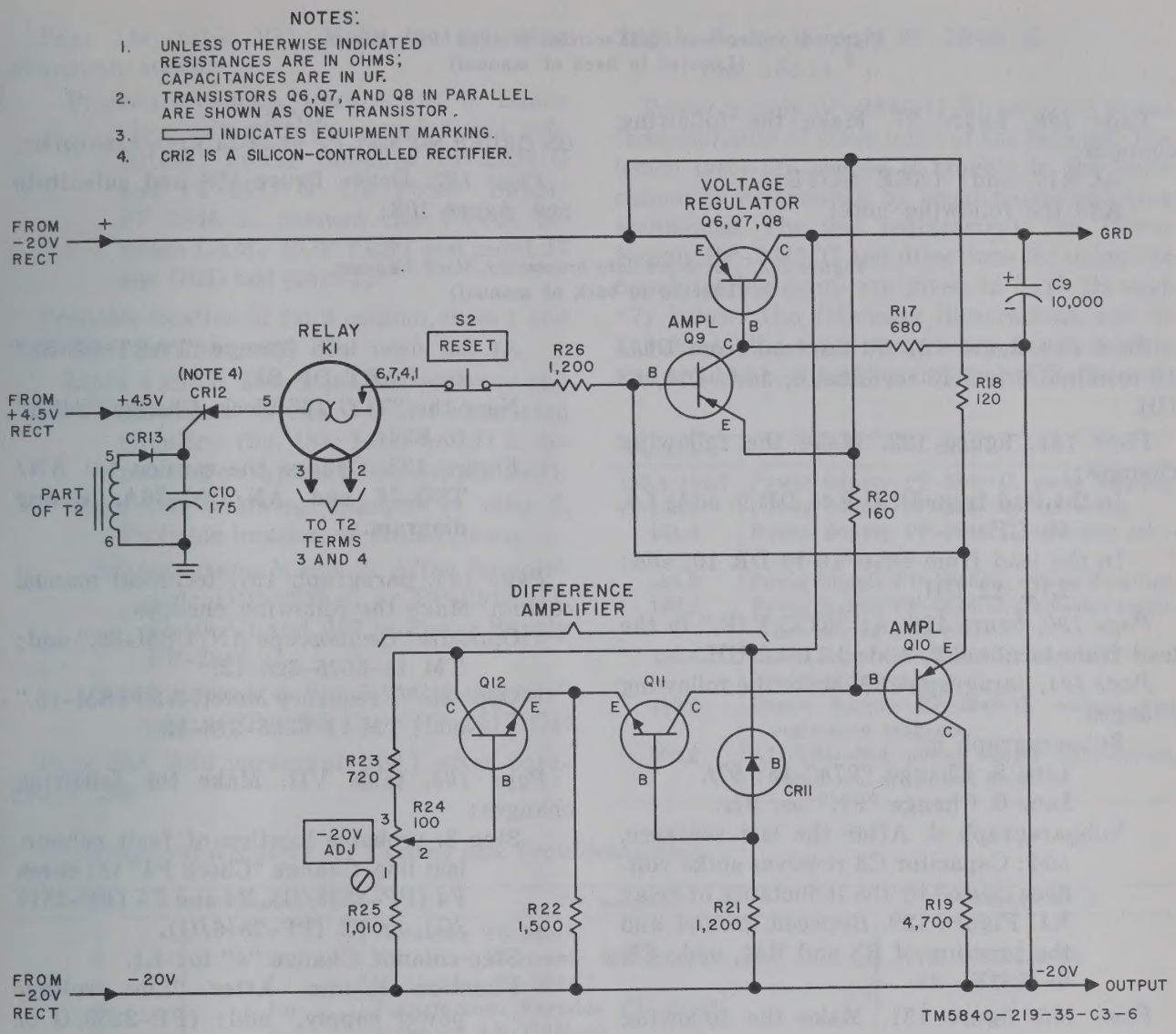

Figure 40.1. Power Supply PP-2846/G, —20-volt control amplifier, voltage regulator, and short-circuit protection, simplified diagram.

Page 83, paragraph 94*d*, line 12. Change "data pulse" to: **bias from terminal 3.**

Pages 89 and 90, paragraph 97*a* and *e*. After the last sentence, add: Capacitor C3 removes spike voltages caused by the inductance of an externally connected relay. A 12-microhenry inductance is connected externally in series with the output at terminal 6 to eliminate noise spikes during relay operation.

Page 101, paragraph 107*b*, line 22. Delete "CR5" and substitute: CR3, CR4, and the input gates of the TRR and URR F/O's.

Page 134, figure 74. Make the following changes:

Change the value of R19 from "1.21 MEG" to: **360K.**

Change the value of R20 from "15K" to: **4,700.**

Page 143 (page 17 of C 2). Delete figure 83 and substitute new figure 83.

Figure 83. Receiver input section, detailed block diagram.
(Located in back of manual)

Page 156, figure 97. Make the following changes:

At R17, add: (SEE NOTE).

Add the following note:

NOTE:
ON ORDER NO. 9337-PP-60-54-54, R17 is 3,880 OHMS.

Page 167. Delete figure 108 and substitute new figure 108:

Figure 108. Receiver data processing, block diagram.
(Located in back of manual)

Page 182, figure 121. In the lead from DLU 10 terminal 6 to K13 terminal 8, add: L10, 12 UH.

Page 184, figure 122. Make the following changes:

In the lead from DLU 9 to DR 9, add: L9, 12 UH.

In the lead from DLU 10 to DR 10, add: L10, 12 UH.

Page 190, figure 128. At "ECC F/F," in the lead from terminal 6, add: L11, 12 UH.

Page 191, paragraph 189. Make the following changes:

Subparagraph *a*,

Line 5. Change "97*h*" to: 97*f*.

Line 6. Change "97*i*" to: 97*g*.

Subparagraph *d*. After the last sentence, add: Capacitor C3 removes spike voltages caused by the inductance of relay K1. Figure 129. Between ground and the junction of R3 and R41, add: C3, 66 UUF.

Page 193, figure 131. Make the following changes:

At the lower left. Change "PART OF S3" to: **PART OF S1.**

Near the "TCG 13" block. Change "S43A" to **S54A.**

Figure 132. Change the caption to: **AN/TSQ-36 and AN/TSQ-36A, timing diagram.**

Page 195, paragraph 197, technical manual column. Make the following changes:

Opposite "Oscilloscope AN/USM-89," add: TM 11-6625-328-12.

Opposite "Frequency Meter, AN/TSM-16," add: TM 11-6625-218-12.

Page 198, table VII. Make the following changes:

Step 3, probable location of fault column, last line. Change "Check F4" to: **check F4 (PP-2235/G), F4 and F5 (PP-2517/G), or F2 (PP-2846/G).**

Step column. Change "4" to: 4.1.

Function column. After "Low voltage power supply," add: (PP-2235/G or PP-2517/G).

Add step 4.2 after step 4.1.

Step	Function	Procedure	Normal indication	Probable location of fault
4.2	Low voltage power supply (PP-2846/G).	Set +4.5V & —20V SUP switch to ON.	*a.* +4.5V & —20V POWER ON lamp lights after approximately 1 minute.	*a.* Check for open 2.0A FN +4.5V & —20V fuse F1 as indicated by associated lamp. Depress RESET pushbutton. Check voltage and resistance (fig. 183.2). Check circuitry (fig. 181.2).
		Check voltage between +4.5V test point J3 and GRD test point J5.	*b.* Meter indicates presence of +4.5 volts.	*b.* Same as *a* above.
		Check voltage between —20V test point J6 and GRD test point J5.	*c.* Meter indicates presence of —20 volts.	*c.* Same as *a* above.

Page 199, table VII. Make the following changes in step 6:

Procedure column, lines 5 and 6. Delete "low voltage power supply" and substitute: Power Supplies PP–2235/G and PP–2517/G. On Power Supply PP–2846/G, connect the VTVM between LAMP SUP TEST test point J7 and GRD test point J5.

Probable location of fault column, lines 1 and 2. Delete: potentiometer R3.

Lines 4 and 5. Delete the last sentence and substitute: Check V2 and associated circuitry (fig. 181, 181.1 or 181.2, depending on type of power supply used).

Make the following changes in step 7, Probable location of fault column:

Subparagraph *b*, line 3. After "supply" add: (PP–2235/G or PP–2517/G). Check V1 and R37 in Power Supply PP–2846/G.

Subparagraph *d*, line 3. After "supply" add: (PP–2235/G or PP–2517/G).

Page 258. Add paragraph 208.1 after paragraph 208.

208.1. Power Supply PP–2846/G
(fig. 158.1)

Power Supply PP–2846/G can be bench tested independently of other units of the data set. The bench tests are needed if trouble in the units cannot be determined by usual troubleshooting techniques. The test requirements for Power Supply PP–2846/G and directions for using the bench testing setup are given in *b*(1) through (7) below. The following illustrations will be helpful to the repairman when bench testing and troubleshooting Power Supply PP–2846/G:

Figure No.	Data
152.4–152.7	Power Supply PP–2846/G, parts location.
158.1	Power Supply PP–2846/G, test setup.
181.2	Power Supply PP–2846/G, complete schematic diagram.
182.2	Power Supply PP–2846/G, wiring diagram.
182.3	Power Supply PP–2846/G, transistor amplifier, wiring diagram.
182.4	Power Supply PP–2846/G, component oven, wiring diagram.
183.2	Power Supply PP–2846/G, voltage and resistance diagram.
208.2	AN/TSQ–36A power supply distribution, functional schematic diagram.

a. Equipment Required for Testing and Troubleshooting.

Item	Quantity	Test equipment	Technical manual
1	1	Voltmeter TS–340/U.	
2	1	Voltmeter, Electronic, ME–26A/U	TM 9–9505–1–35
3	1	Multimeter TS–352/U	TM 11–5527
4	1	Transformer, Variable, CN–16/U.	
5	1	Ammeter AN/USM–69.	
6	1	Voltmeter, Electronic, AN/USM–98	TM 9–4935–401–34/13
7	2	Connectors P1 and P2, per SM–C–336478.	
8	1	Oscilloscope AN/USM–89	TM 11–6625–328–12
9	1	Power Supply PP–2236/G (part of AN/TSQ–36) or equivalent.	
10	1	Resistor, 8 ohms ±5 percent, 50 watts.	
11	1	Resistor, 15,000 ohms ±5 percent, 2 watts.	
12	2	Switch, spdt, center off, 20 volts, 3 amp.	
13	2	Switch, spst, 20 volts, 3 amp.	
14	1	Switch, spst, 100 volts, 1 amp.	
15	1	Rheostat, 10,000 ohms, 4 watts.	
16	1	Rheostat, 5 ohms, 4 watts.	
17	1	Rheostat, 10 ohms, 50 watts.	
18	1	Resistor, 1 megohm, 1 watt.	
19	4	Resistor, 3.16 ohms, 20 watts.	
20	1	Capacitor, 1 uf ±5 percent, 200 volts dc.	
21	1	Diode, type 1N93, per SM–B–190123.	
22	1	Resistor, 42.5 ohms ±5 percent, 1 watt.	
23	1	Resistor, 95 ohms ±5 percent, 10 watts.	
24	1	Resistor, 4 ohms ±5 percent, 5 watts.	
25	1	Dpst switch, 115V, 3 amp.	

b. Operational Tests. These tests consist of measuring resistance, ac, dc, and ripple voltages, tracking, and short-circuit protection.

Note. Before making these tests, disconnect the power supply from all power, and check the following resistances; use multimeter TS–352/U.

From	To	Ohms ±15 percent
GRD test jack*	+4.5V test jack	220
GRD test jack	LAMP SUP TEST jack	115 K
GRD test jack	J1 terminal E	110 K
J1 terminal A	J1 terminal B	8 K
—20V test jack*	GRD test jack	27

*For these measurements, the positive terminal of the meter must be connected to the terminal shown in the from column.

(1) *Pretest setup and adjustments* (fig. 158.1).

(*a*) Connect items 4 and 9 through 25 as shown in figure 158.1.

(*b*) Connect plugs P1 and P2, item 7 to connectors J1 and J2, respectively, of the power supply being tested.

(*c*) Apply 117 volts ±5 percent, 60 cycles.

(*d*) Operate the +4.5V and —20V SUP ON-OFF switch to ON. Lamp +4.5V and —20V SUP ON POWER ON should light.

Note. The neon lamps on the front panel fuseholder should not light. If lamps light, replace the associated fuse.

(*e*) Adjust power supply, item 9, for +300 volts and —300 volts as measured on meters M1 and M5, item 6.

(*f*) Operate S5, item 12, for a reading of 2.1 amperes on meter M8, item 5.

(*g*) Operate S4, item 12, for a reading of 0.6 ampere on meter M6, item 5.

(2) *Voltage measurements.*

(*a*) Adjust the ac input to 117 volts as measured on meter M9, item 6. Use electronic voltmeter, item 2, and measure the voltage between J2 terminal C–D, E–F, H–J, and R–S. These voltages should be 6.4 volts rms ±0.4.

(*b*) Using meter M11, item 6, adjust —20V ADJ for —20 volts ±0.1 percent. Use meter M7, item 6, and adjust +4.5V ADJ for +4.5 volts ±0.1 percent at 70° F.

Note. The —20-volt output must be adjusted before adjusting the +4.5-volt output because of the voltage tracking. The +4.5-volt output at any temperature (T) is adjusted to: V out = +4.5V +(T —70° F.) (0.009 volts) ±0.1%.

For example, for a temperature of 80° F., adjust the +4.5-volt output for 4.5 +(80 —70) 0.0091 = 4.591 volts.

(*c*) Measure the ac ripple voltage (using oscilloscope, item 8) with the input voltages listed in the chart below. The loads are varied with switches S4 and S5, item 12. The —20-volt output should be between —19.3 volts and —20.17 volts, and the +4.5-volt output should be between +4.46 and +4.54 volts for all tests in the chart below.

Ac input frequency (cps)	Input (volts)	—20-v output		+4.5-v output (T = 70° F.)	
		Load (amp)	Max ripple (peak-to-peak mv)	Load (ma)	Max ripple (peak-to-peak mv)
60	117	2.10	150	600	50
60	105	2.10	150	600	50
60	130	0.20	150	100	50

(3) *Lamp supply output measurements.*

(*a*) With the ac input line voltage set at 117 volts, open switch S1, item 14, for a reading of 0 milliampere on meter M4, item 3.

(*b*) Adjust LAMP SUP ADJ VOLTS to obtain a plateau voltage of 79 volts as measured on M10, item 1.

(*c*) The ac signal voltage at LAMP SUP TEST jack J7, as read on the electronic voltmeter, item 2, should be greater than 18 volts, peak-to-peak.

(*d*) Adjust the line volts to 105 volts and then to 130 volts. Measure the plateau voltage on meter M10, item 1, for each line voltage. The plateau voltage limits are 76.5 to 79.0 volts for the line voltage change from 105 to 117, and 79.0 to 81.5 volts for the line voltage change from 117 to 130

volts. The ac signal voltage should be greater than 18 volts peak to peak for all line voltages.

(*e*) Close switch S1, item 14, and adjust R2, item 15, for a reading of 8 milliamperes ±1 as measured on meter M4, item 3.

(*f*) Measure the plateau voltage on meter M10, item 1. The plateau output voltage limits are from 79.0 to 81.0 volts.

(*g*) Adjust R2, item 15, for a reading of 13 milliamperes on meter M4, item 3. This corresponds to a nominal peak current of 15 milliamperes. The plateau output voltage should be 78.4 to 81.0 volts.

(4) *+150-volt output.* Measure the +150-volt output voltage on meter M2, item 6. This voltage should be between 142 and 160 volts.

(5) *Short-circuit protection.*

(*a*) Apply a short circuit across the +4.5-volt output by closing switch S2, item 13. The +4.5-volt output should drop to less than 0.1 volt as indicated on meter M7, item 6, and less than 0.3 ampere as indicated on meter M6, item 5. The —20-volt output should drop to less than 0.5 volt as indicated on meter M11, item 6, and less than 0.1 ampere as indicated on meter M8, item 5. Remove the short circuit and depress RESET button.

(*b*) Apply a short circuit across the —20-volt output by closing switch S3, item 13. The —20-volt output should drop to less than 0.1 volt as indicated on meter M11, item 6, and less than 0.1 ampere as indicated on meter M8, item 5. The +4.5-volt output should drop to less than 1.0 volt as indicated on meter M7, item 6, and less than 0.3 ampere as indicated on meter M6, item 5. Remove the short circuit and depress RESET button.

(6) *Voltage tracking.*

(*a*) Using —20V ADJ, adjust the —20-volt output to —21-volts as indicated on meter M11, item 6. The +4.5-volt output should be not less than 4.68 volts as indicated on meter M7, item 6.

(*b*) Using —20V ADJ, adjust the —20-volt output to —19 volts as indicated on meter M11, item 6. The +4.5-volt output should be not less than +4.24 volts as indicated on meter M7, item 6.

(*c*) Return the —20-volt output to —20 volts.

(7) *400-Cycle test.* Repeat procedures in (1) through (6) above, using a 400-cps power source. The results should be the same as those obtained in the 60-cycle tests.

Page 286, figure 142, caption. Change caption to: **Coordinate Data Receiver Unit R–930/TSQ –36 or R–975/FSG–1.**

Page 287, figure 142. Between the top row of switches and the row of resistors R11 through R23, add a multiple callout for inductances L1 through L11 (hidden).

Page 310 (page 23 of C 2). Add figures 152.4, 152.5, 152.6, and 152.7 after figure 152.3.

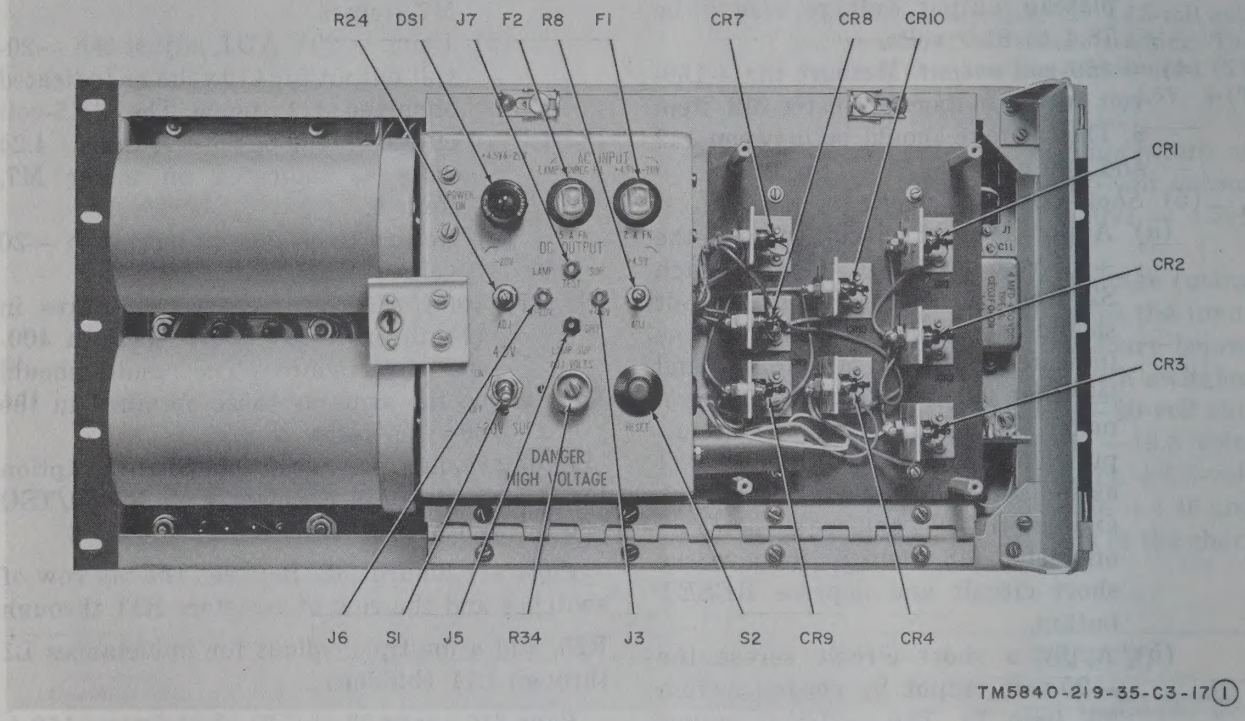

Figure 152.4. Power Supply PP–2846/G.

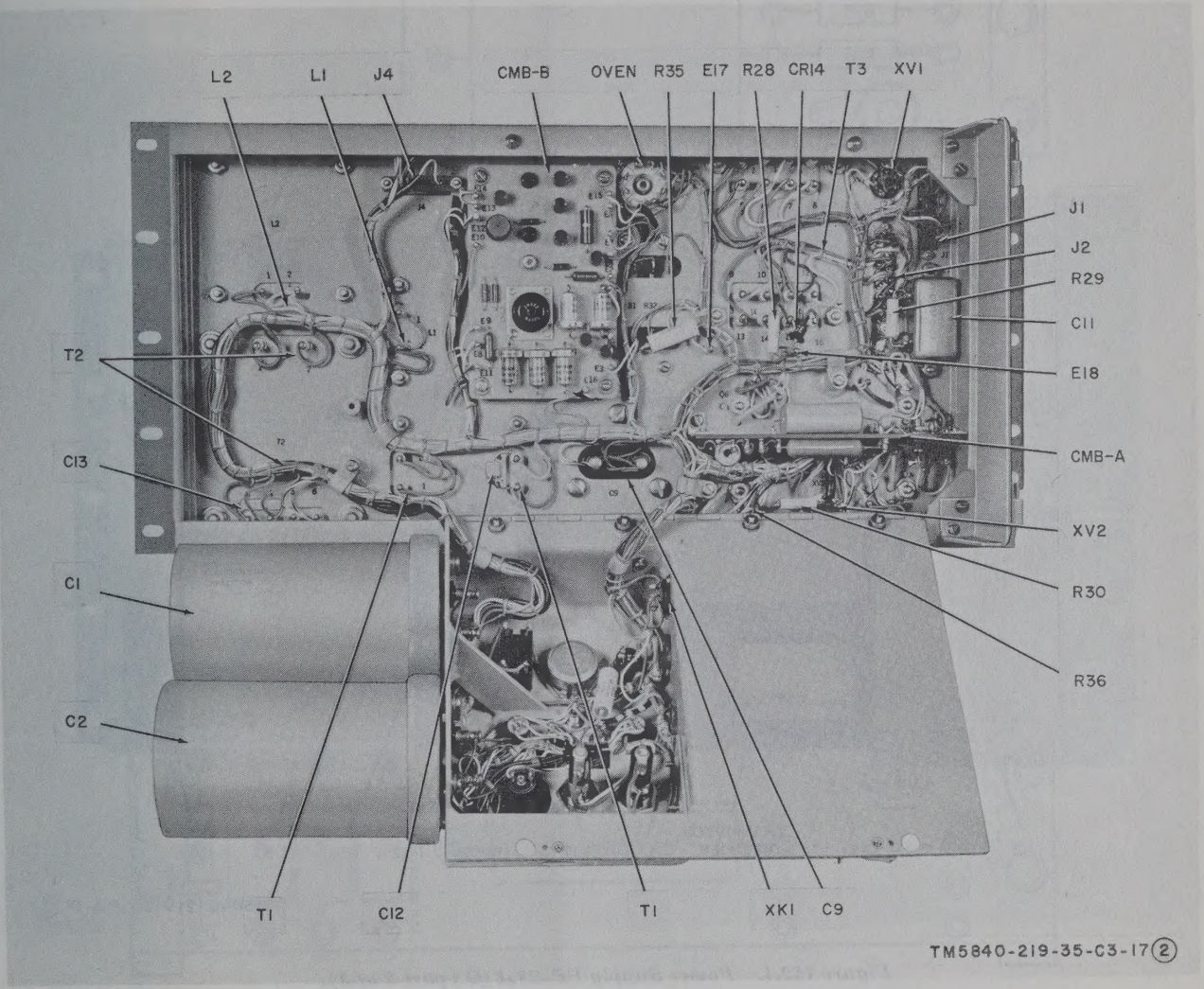

Figure 152.4. Power Supply PP–2846/G (part 2 of 3).

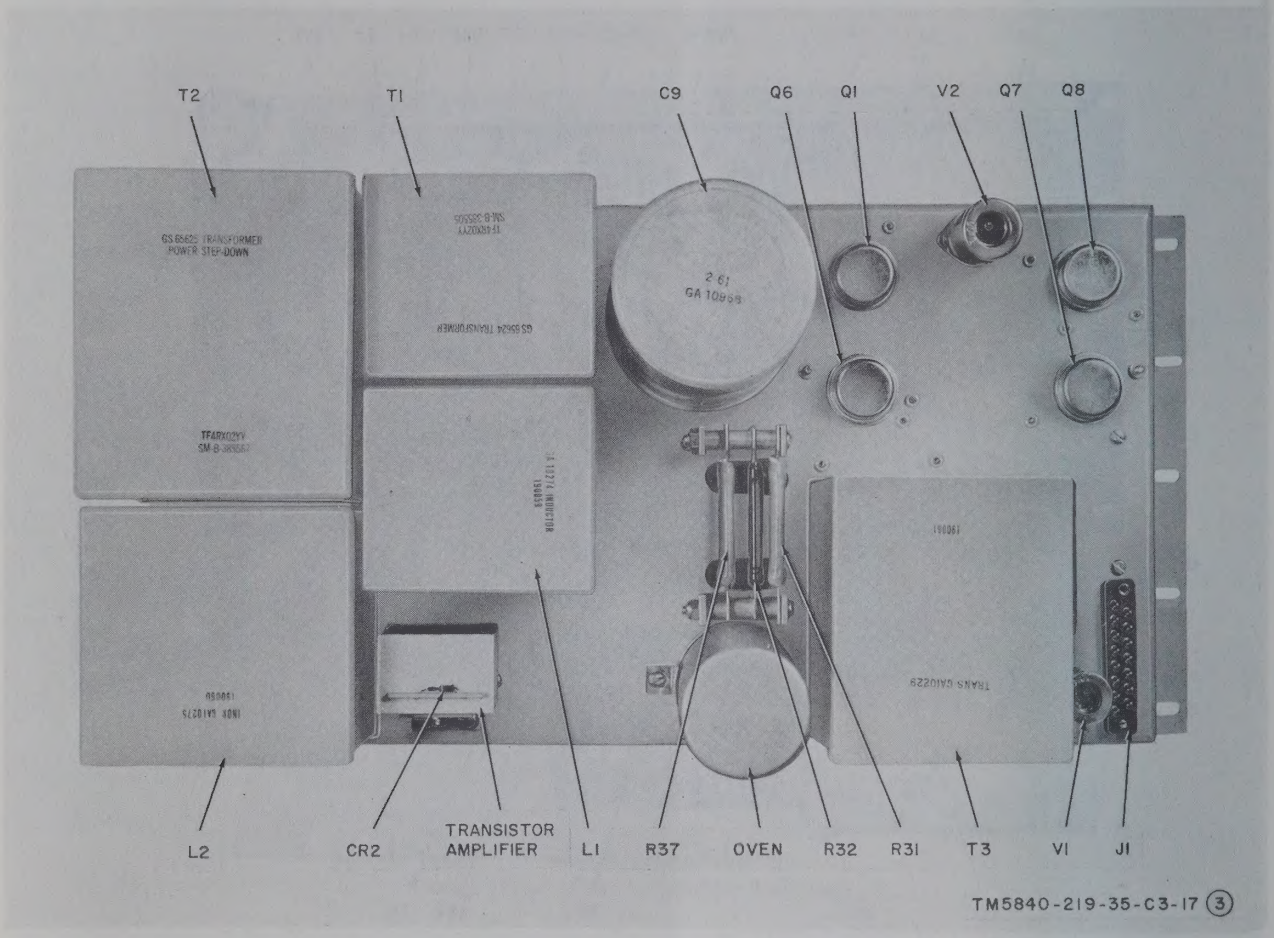

Figure 152.4. Power Supply PP–2846/G (part 3 of 3).

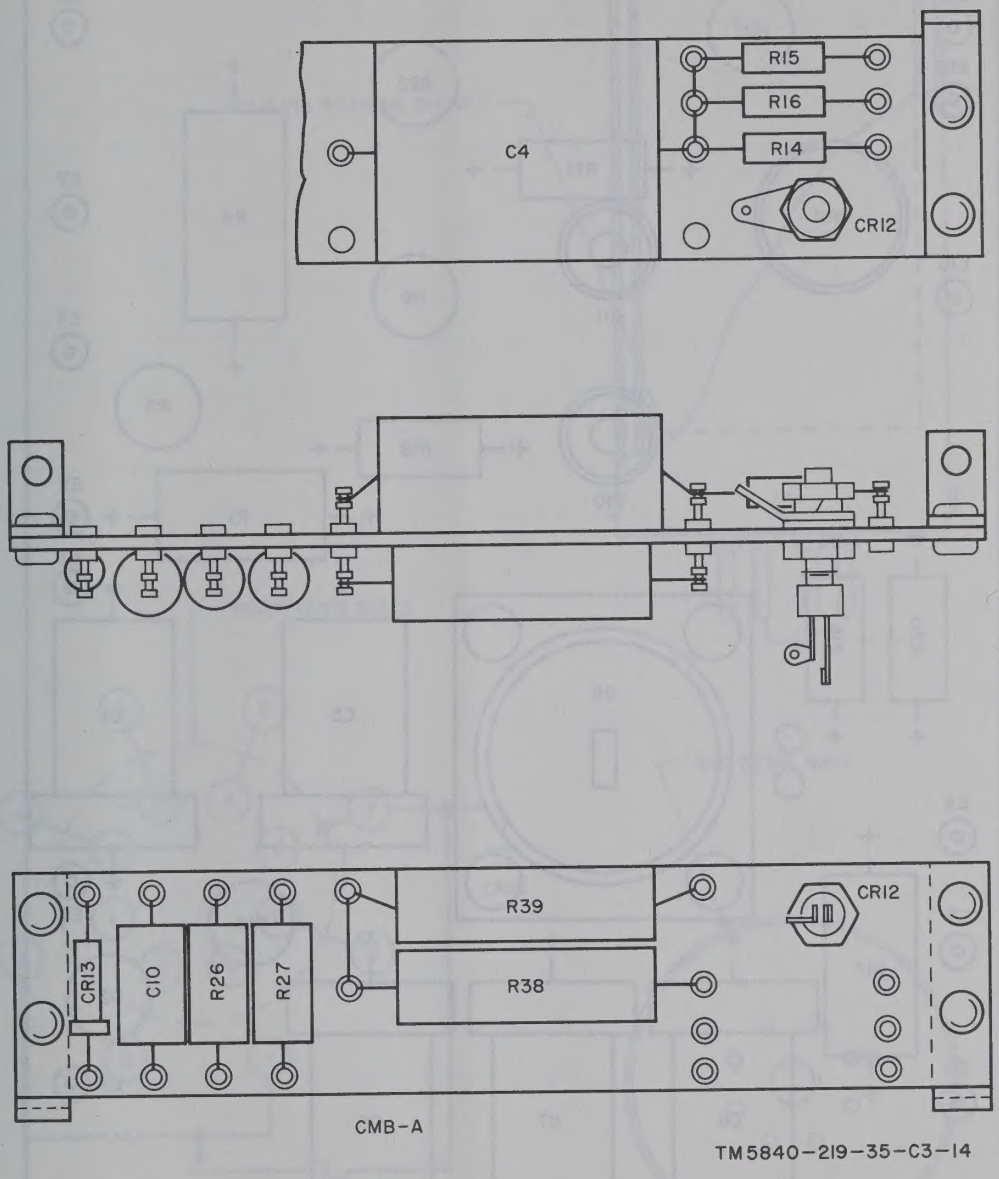

Figure 152.5. Component board CMB–A in Power Supply PP–2846/G.

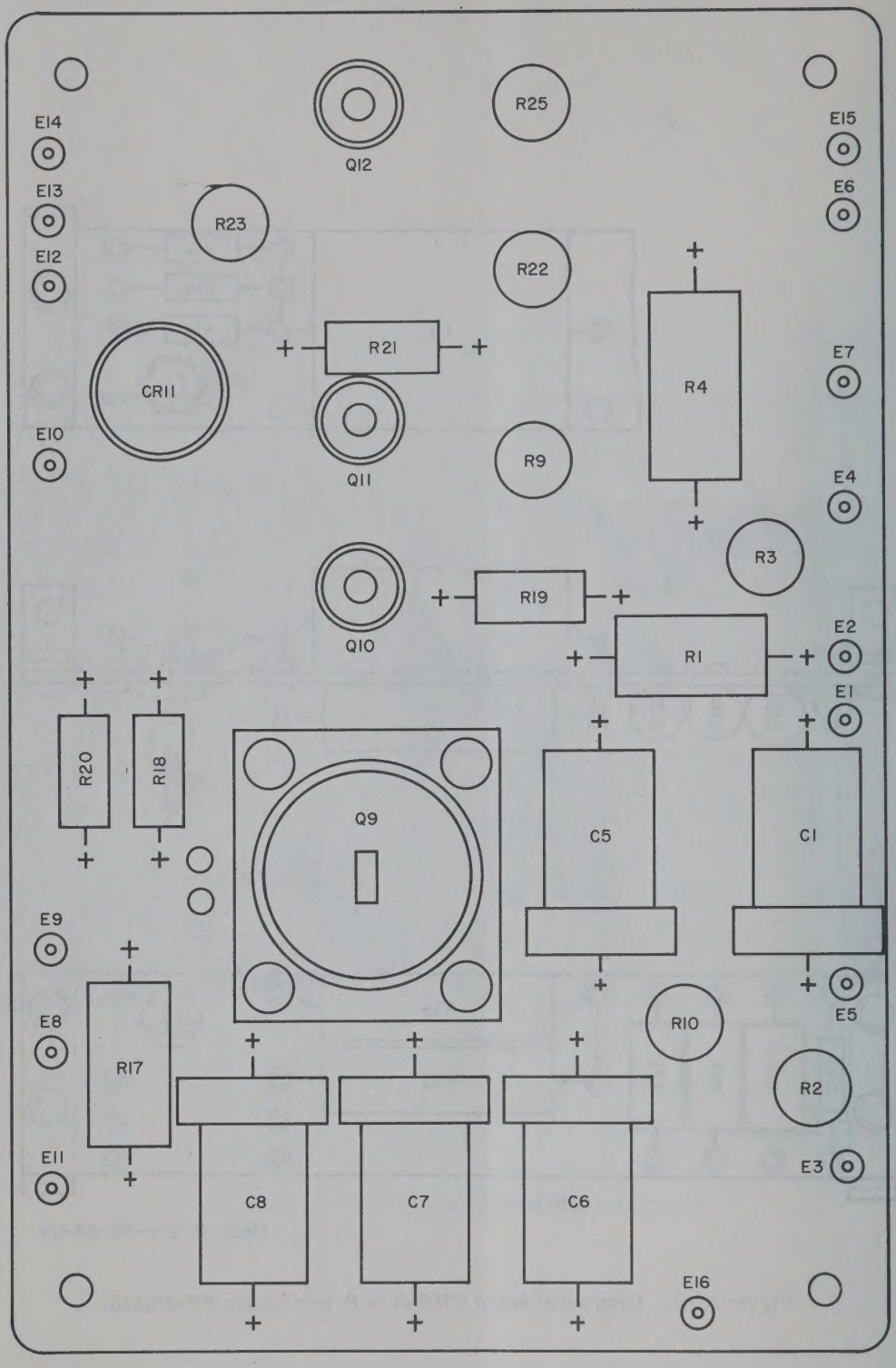

CMB–B

TM 5840–219–35–C3–15

Figure 152.6. Component board CMB–B in Power Supply PP–2846/G.

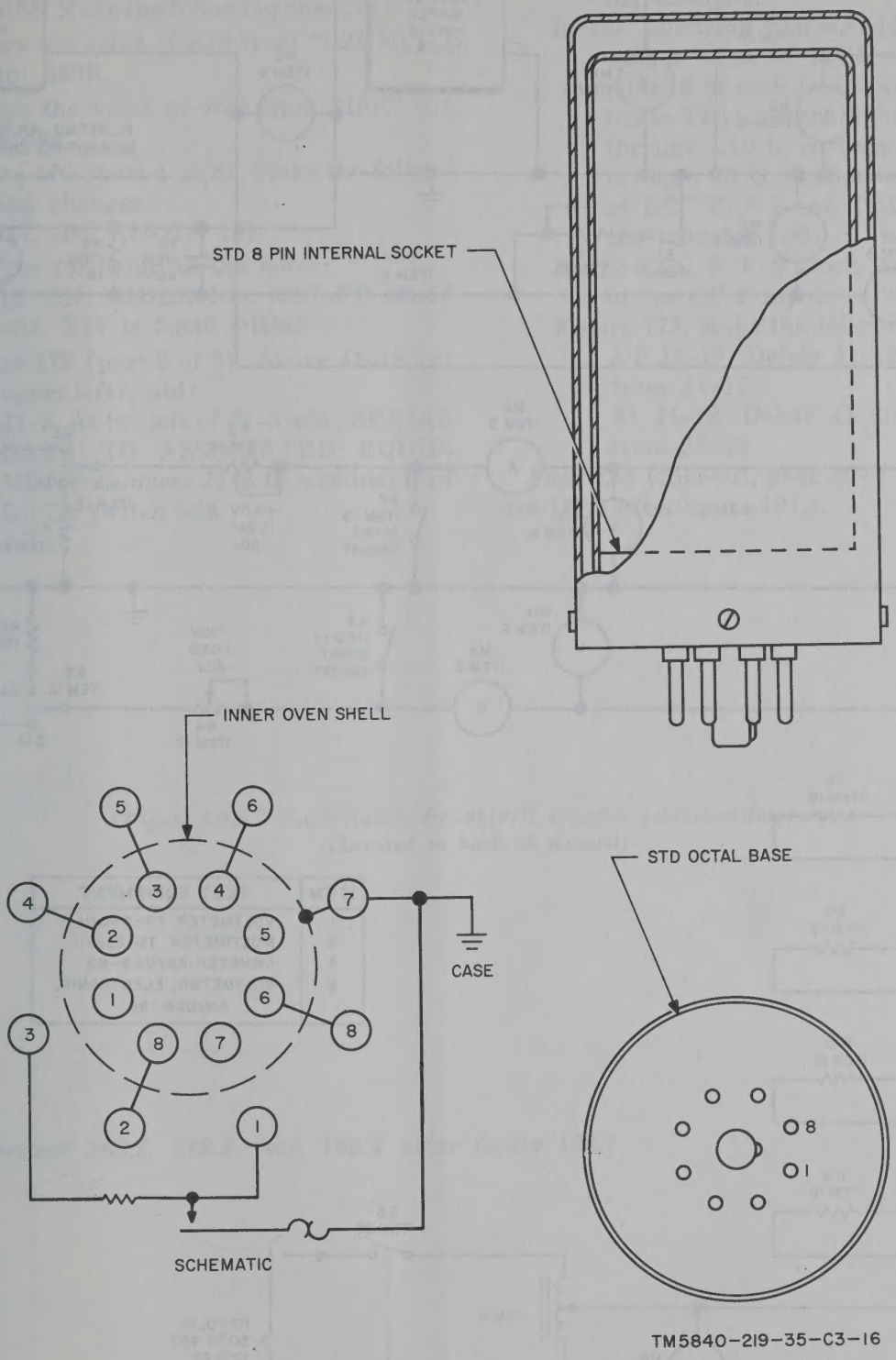

Figure 152.7. Component oven mounting in Power Supply PP-2846/G.

Page 315. Add figure 158.1 after figure 158.

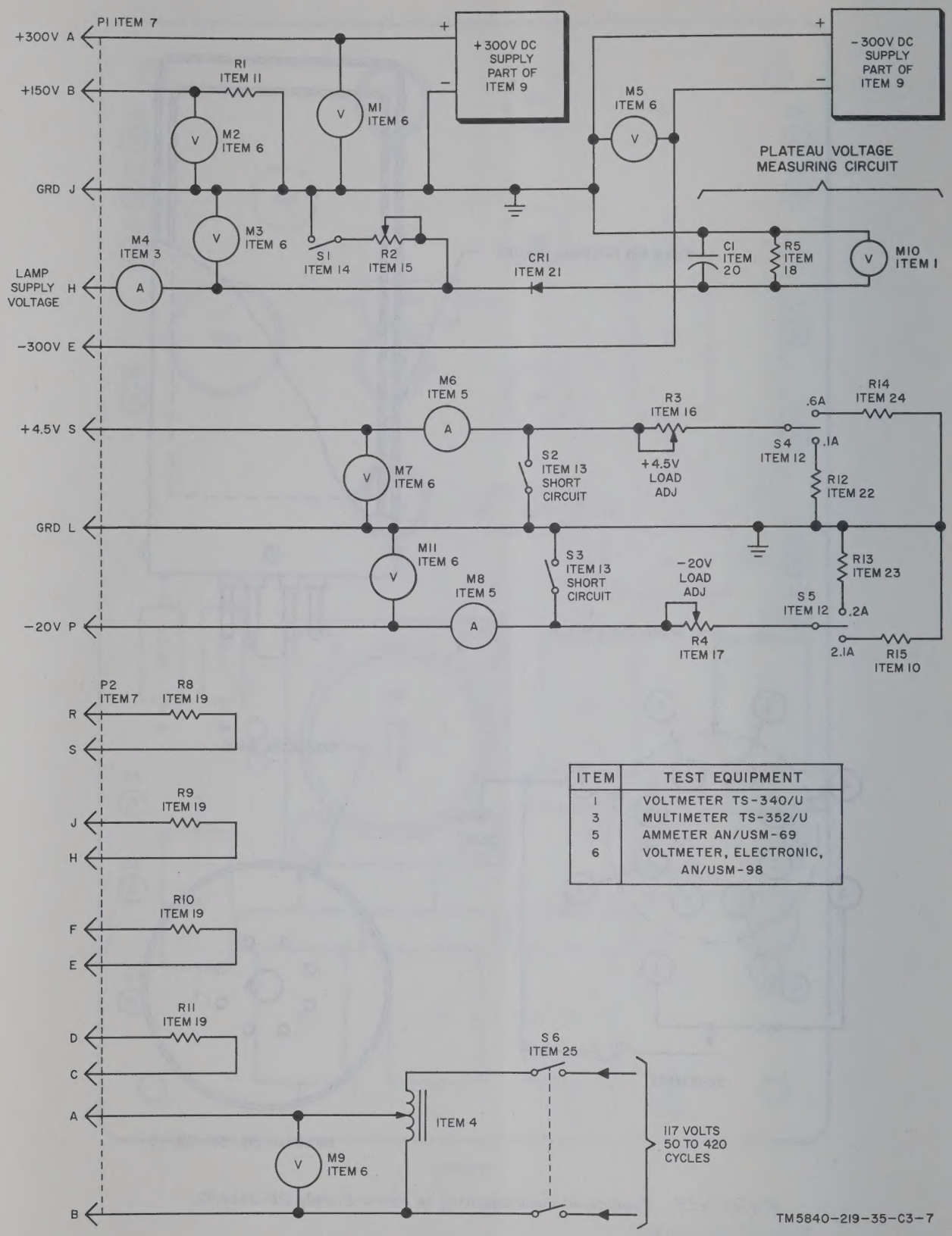

ITEM	TEST EQUIPMENT
1	VOLTMETER TS-340/U
3	MULTIMETER TS-352/U
5	AMMETER AN/USM-69
6	VOLTMETER, ELECTRONIC, AN/USM-98

Figure 158.1. Power Supply PP-2846/G, test setup.

Page 331.

Figure 168. Make the following changes:

Change the value of R19 from "1.21 MEG" to: **360K.**

Change the value of R20 from "15K" to: **4,700.**

Figure 170 (part 1 of 2). Make the following changes:

At R17, add: (NOTE 15).

Add the following to the notes:

15. ON ORDER NO. 9337–PP–60–54 –54, R17 is 3,880 OHMS.

Figure 172 (part 2 of 3). Above J1–18 (at upper left), add:

J1–3. At the left of J1–3 add: SERIAL DATA TO ASSOCIATED EQUIPMENT. Connect J1–3 to terminal C of DATA switch S38.

Figure 172 (part 3 of 3). Make the following changes:

In the following places, add an inductor with a value of 12UH: Between terminal 6 of each DLU and the common bus to TB1; designate the inductors L1 through L10 to correspond to DLU 1 through DLU 10. Between terminal 6 of ECC F/F 2 and TB2–3; designate the inductor L11.

In the ECC F/F 2 block, add terminal 2 at the CP 2 input.

Figure 173. Make the following changes:

AT J1–17. Delete J1–19 and the line from J1–17.

At J1–18. Delete J1–20 and the line from J1–18.

Page 333 (fold-out, page 30 of C 2). Add figure 181.2 after figure 181.1.

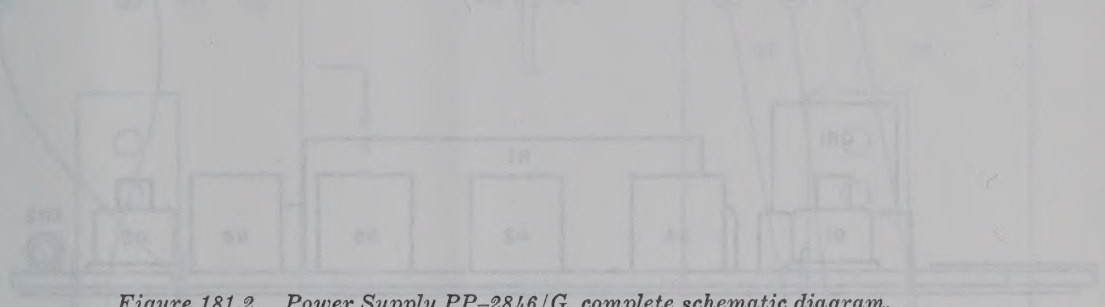

Figure 181.2. Power Supply PP–2846/G, complete schematic diagram.
(Located in back of manual)

Add figures 182.2, 182.3, and 182.4 after figure 182.1.

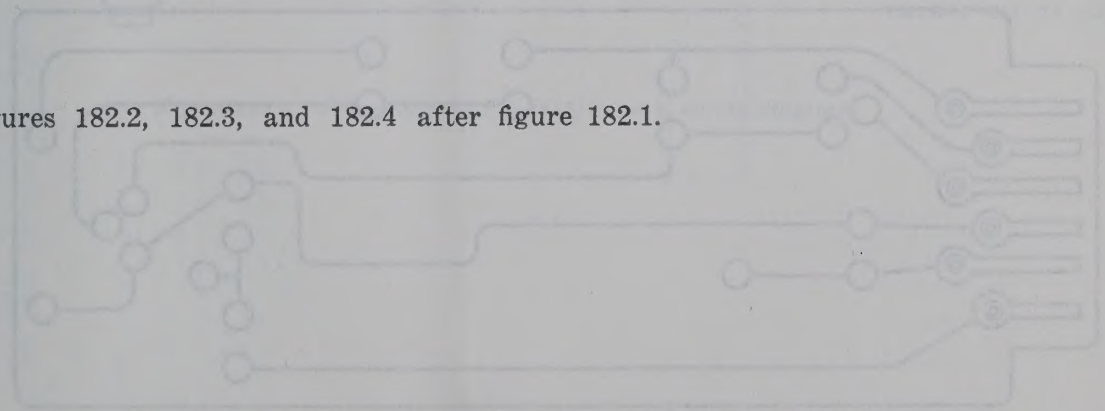

Figure 182.2. Power Supply PP–2846/G, wiring diagram.
(Located in back of manual)

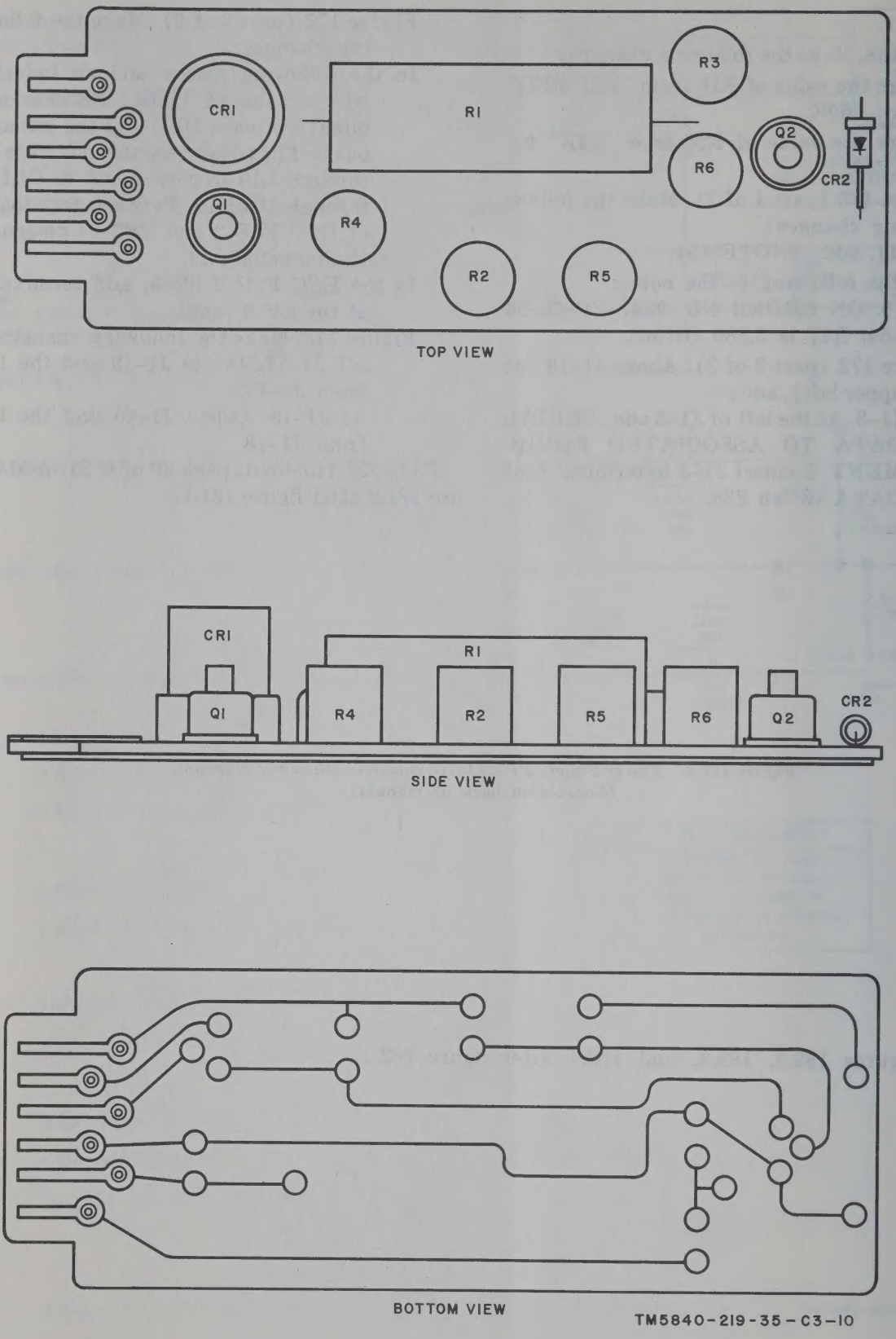

Figure 182.3. Power Supply PP–2846/G, transistor amplifier, wiring diagram.

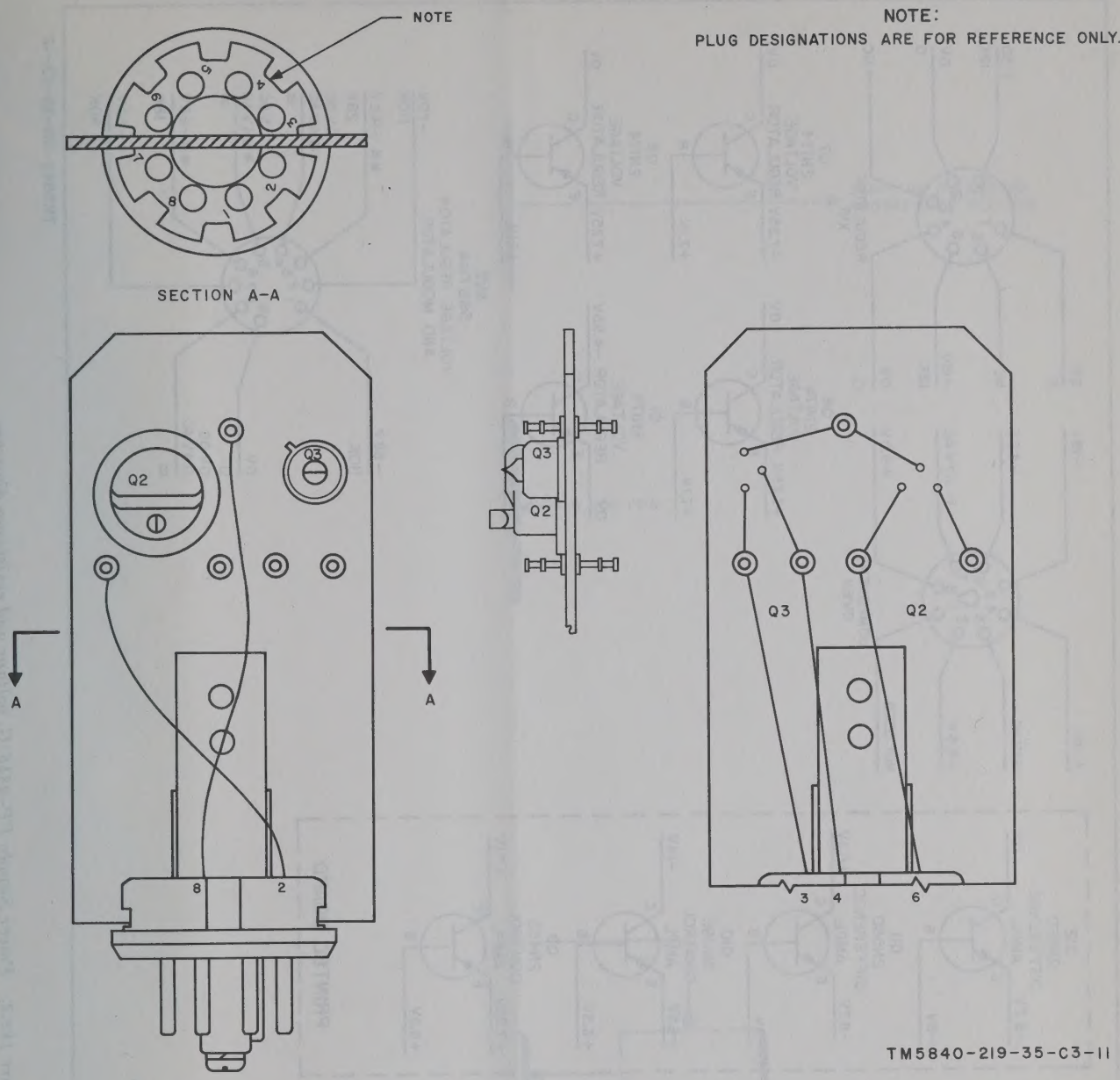

Figure 182.4. Power Supply PP-2846/G, oven, wiring diagram.

Page 334, figure 183. At pin 2 of XV2. Change "–148V" to: **—70V.** Change "72K" to: **110K.** (Page 28 of C 2). Add figure 183.2 after figure 183.1.

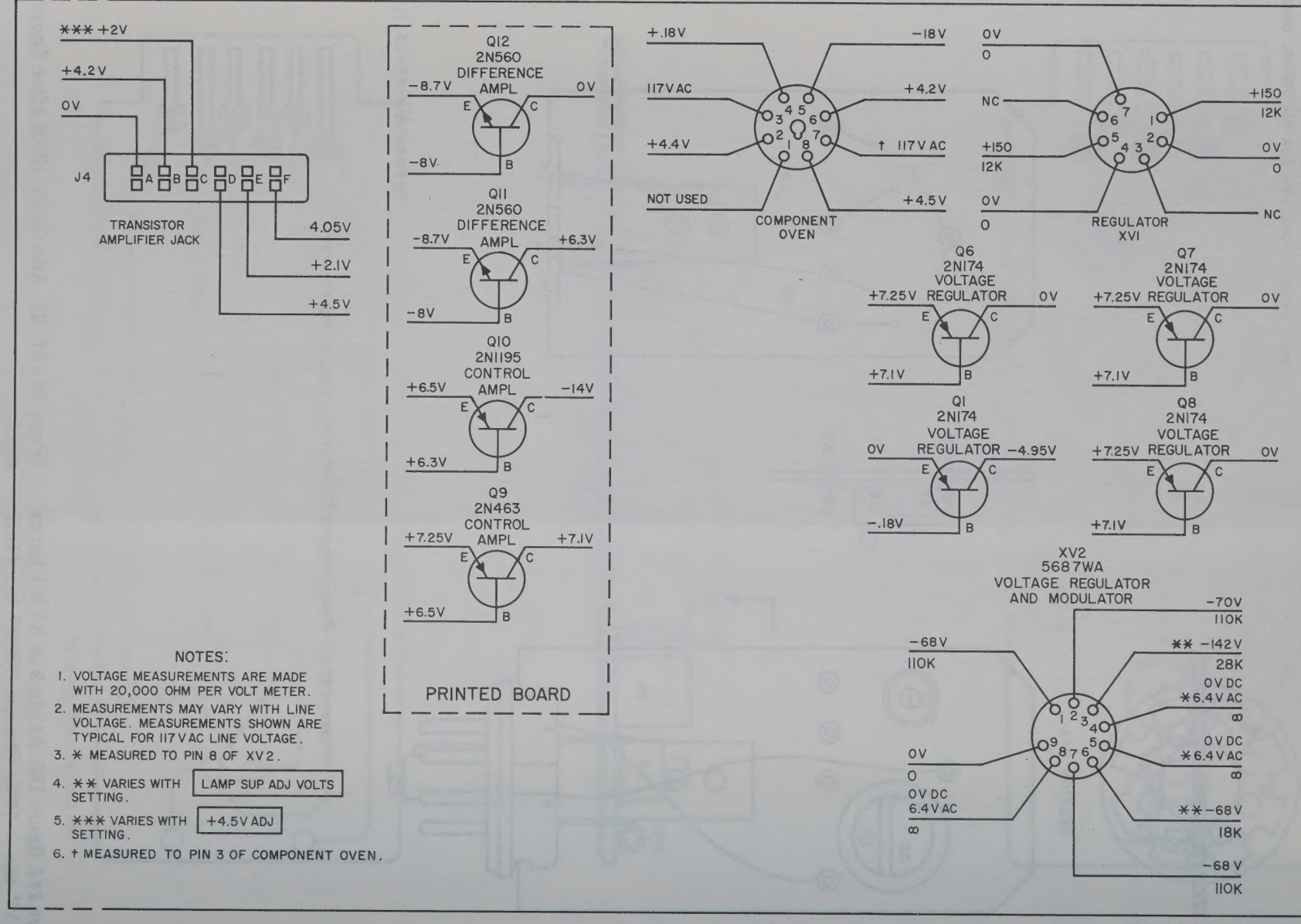

NOTES:

1. VOLTAGE MEASUREMENTS ARE MADE WITH 20,000 OHM PER VOLT METER.
2. MEASUREMENTS MAY VARY WITH LINE VOLTAGE. MEASUREMENTS SHOWN ARE TYPICAL FOR 117 V AC LINE VOLTAGE.
3. * MEASURED TO PIN 8 OF XV2.
4. ** VARIES WITH SETTING. LAMP SUP ADJ VOLTS
5. *** VARIES WITH SETTING. +4.5V ADJ
6. † MEASURED TO PIN 3 OF COMPONENT OVEN.

TM 5840-219-35-C3-12

Figure 183.2. Power Supply PP-2846/G, voltage and resistance diagram.

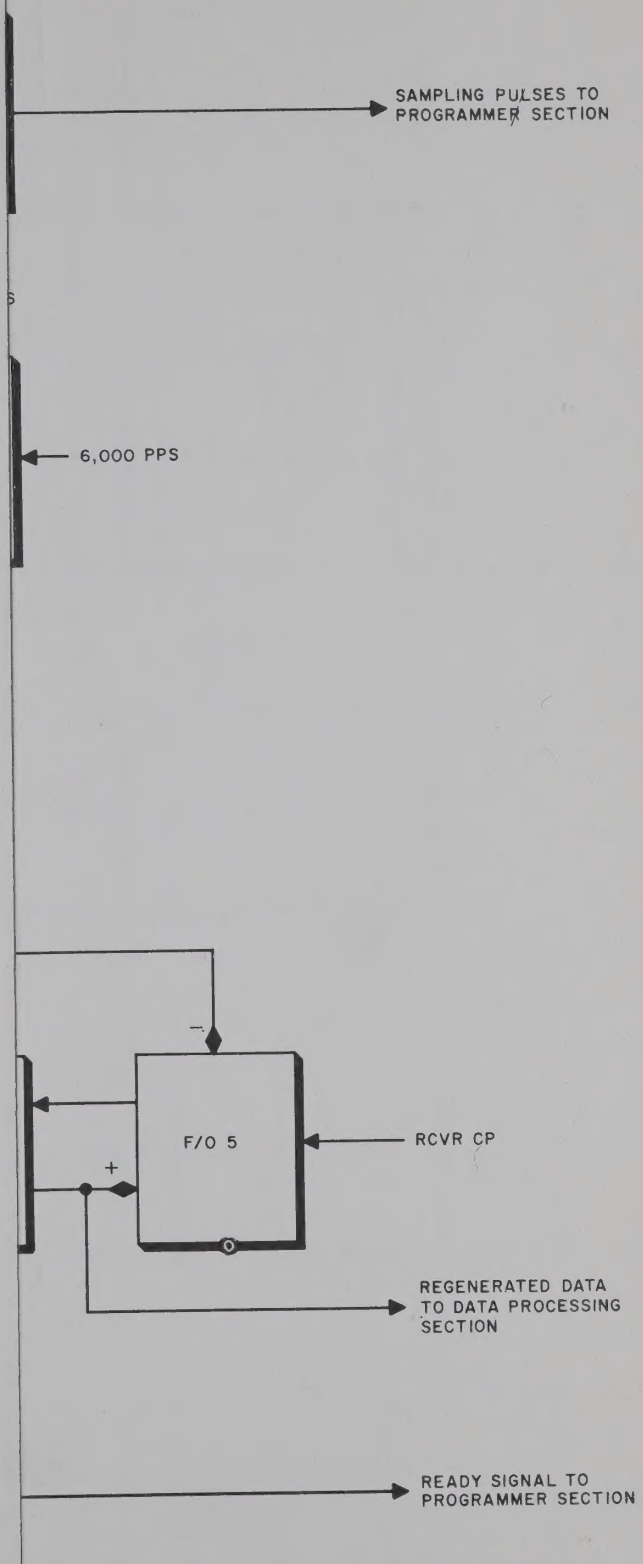

TM5840-219-35-C3-22

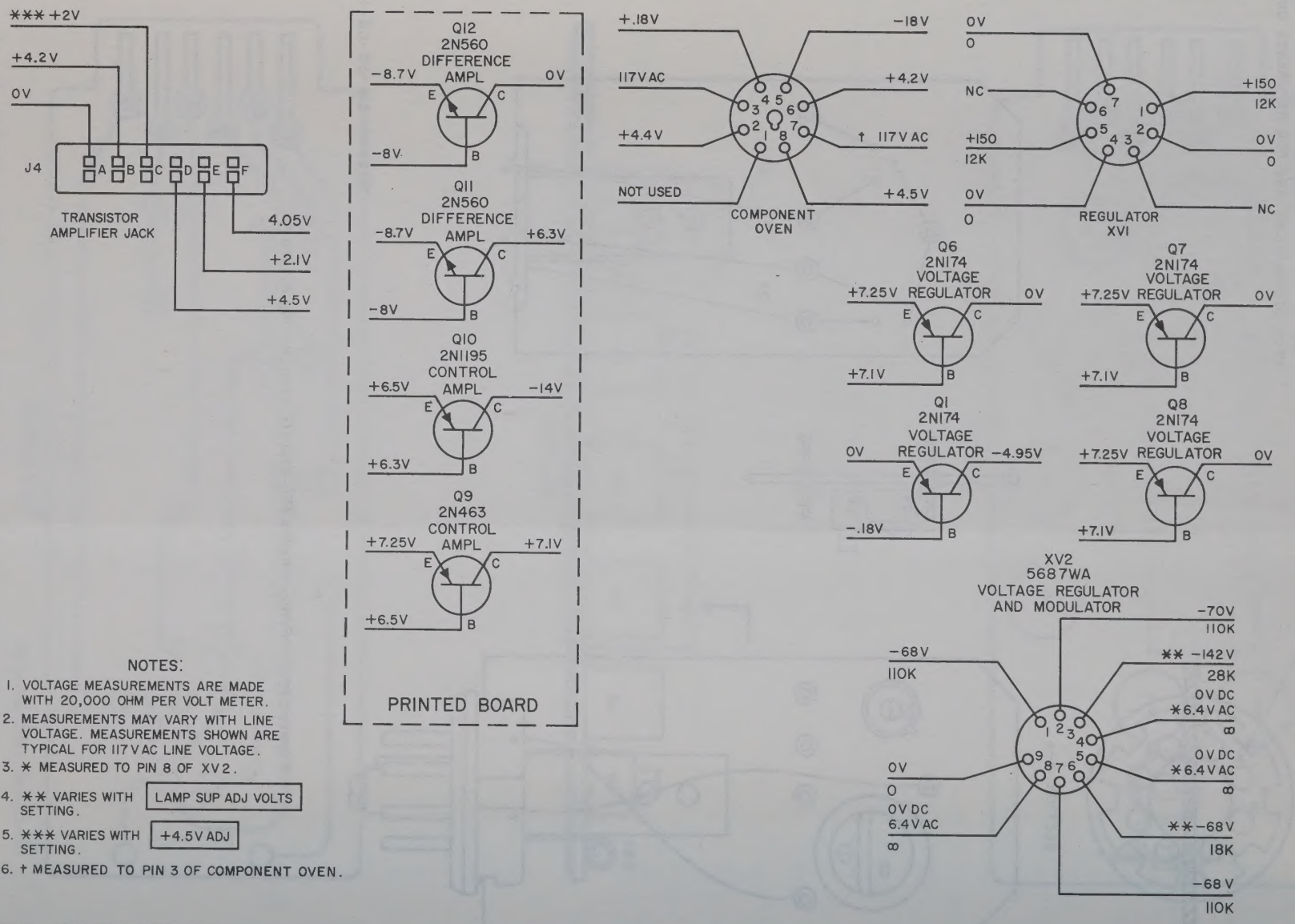

NOTES:

1. VOLTAGE MEASUREMENTS ARE MADE WITH 20,000 OHM PER VOLT METER.
2. MEASUREMENTS MAY VARY WITH LINE VOLTAGE. MEASUREMENTS SHOWN ARE TYPICAL FOR 117 V AC LINE VOLTAGE.
3. * MEASURED TO PIN 8 OF XV2.
4. ** VARIES WITH SETTING. LAMP SUP ADJ VOLTS
5. *** VARIES WITH SETTING. +4.5V ADJ
6. † MEASURED TO PIN 3 OF COMPONENT OVEN.

TM 5840-219-35-C3-12

Figure 183.2. Power Supply PP-2846/G, voltage and resistance diagram.

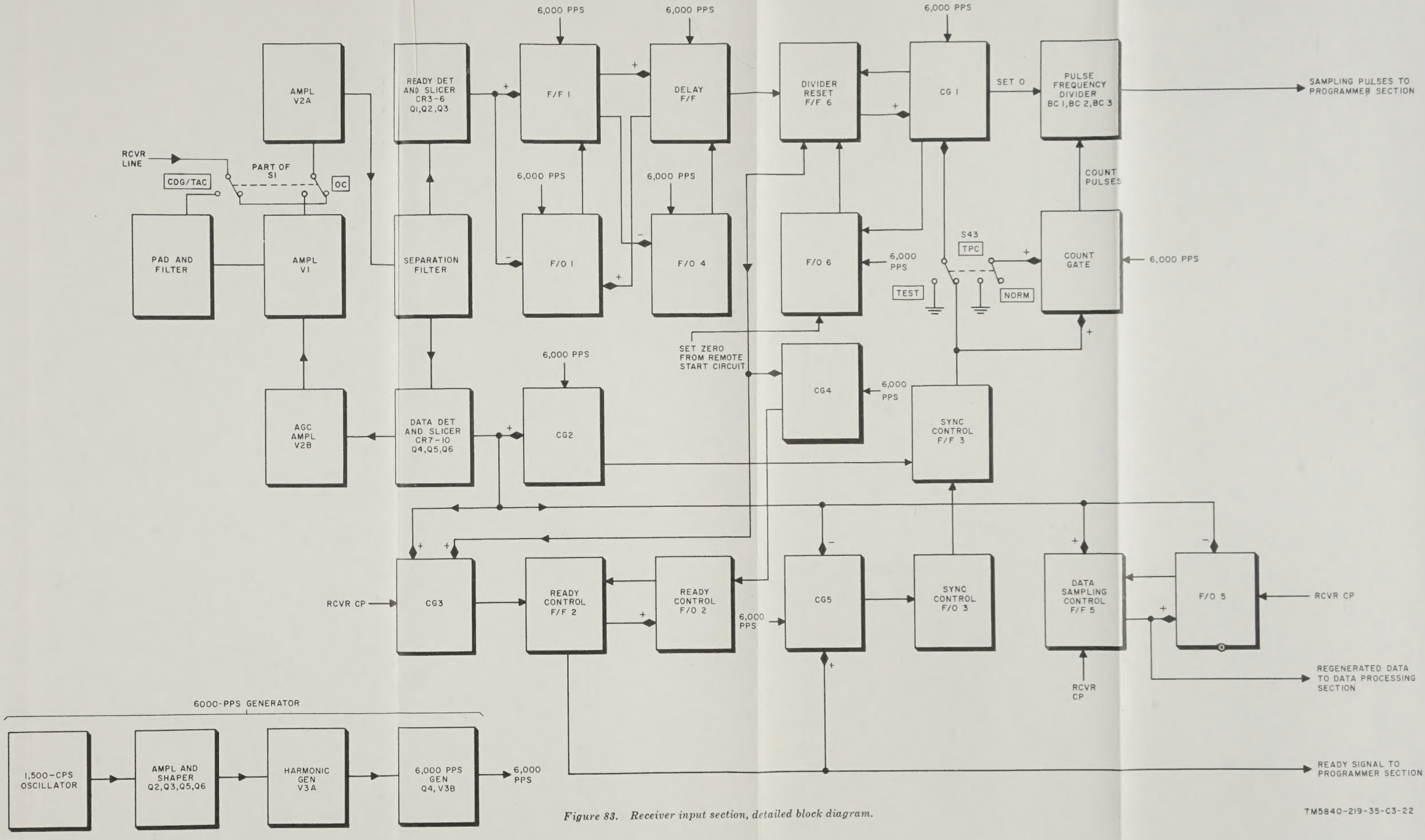

Figure 83. Receiver input section, detailed block diagram.

TM5840-219-35-C3-22

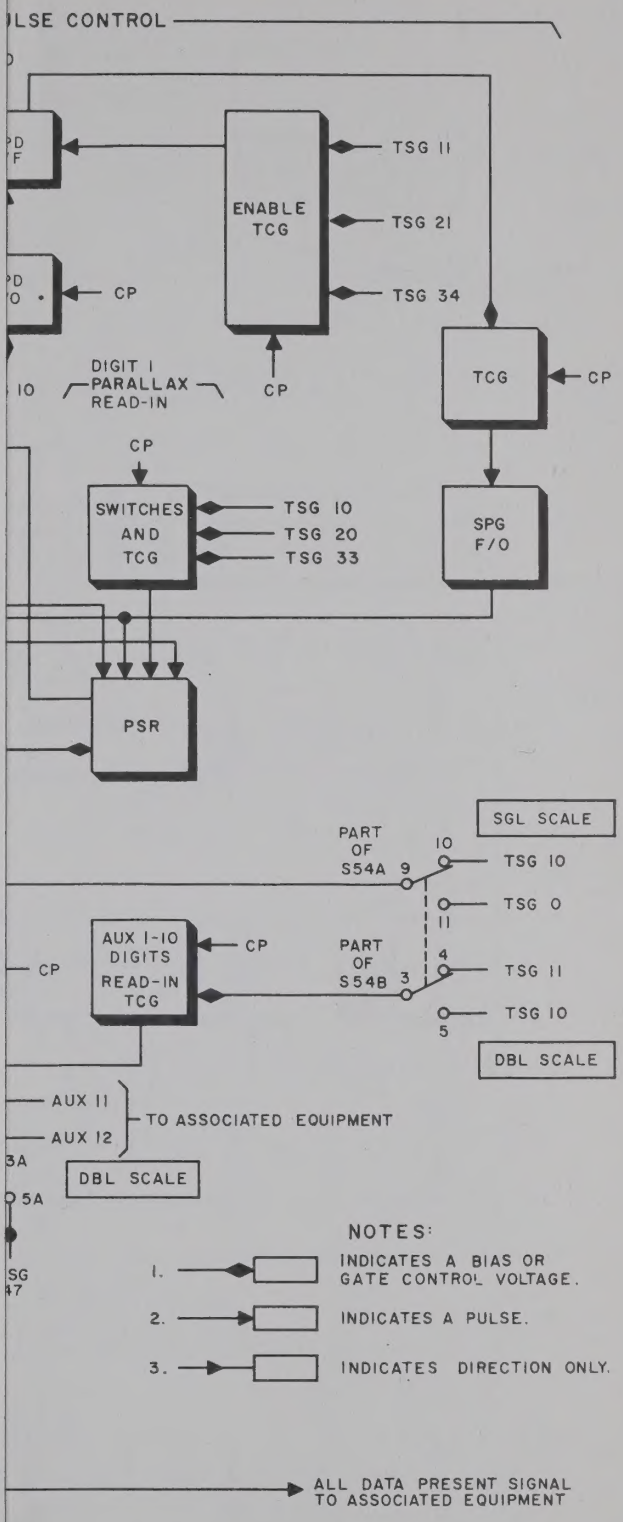

TM5840-219-35-C3-23

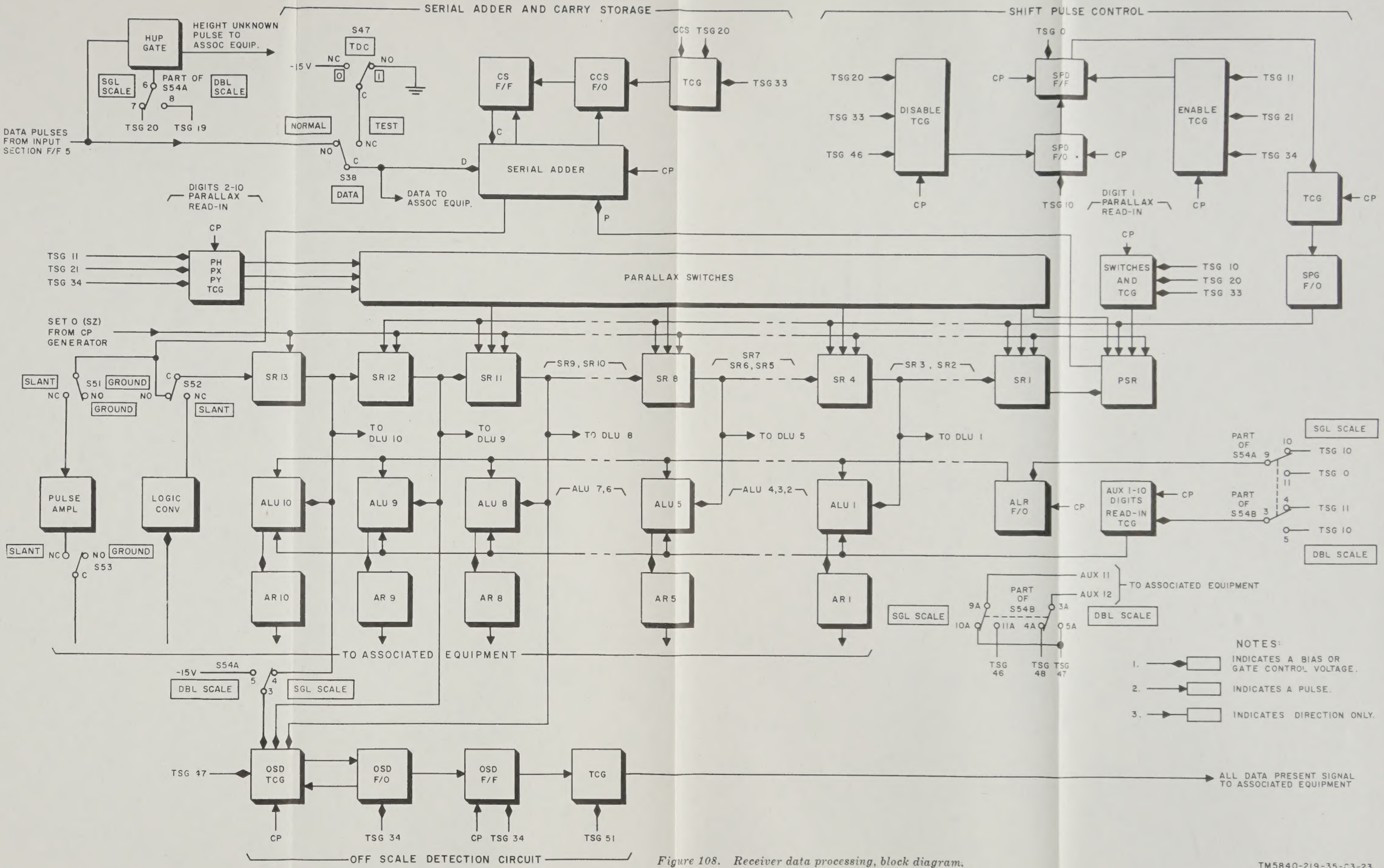

Figure 108. Receiver data processing, block diagram.

TM5840-219-35-03-23

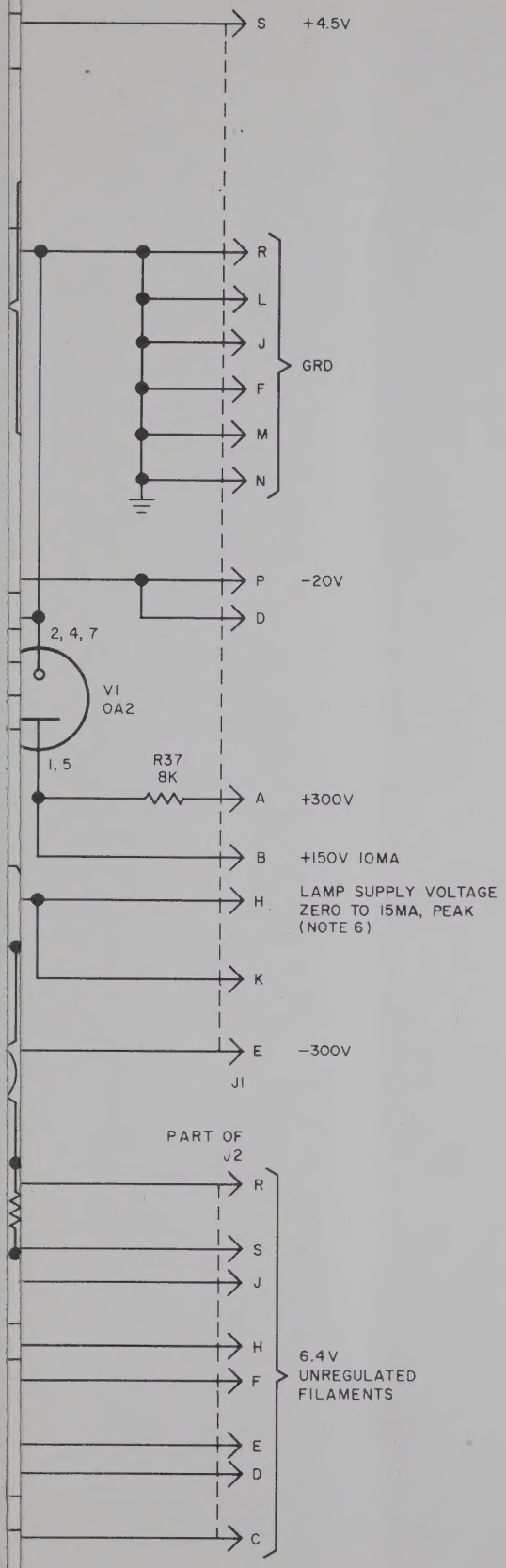

NOTES:

1. UNLESS OTHERWISE INDICATED RESISTANCES ARE IN OHMS, CAPACITANCES ARE IN UF.
2. TAP IS SELECTED AT TIME OF INSTALLATION. UNIT IS FURNISHED WIRED TO TAP 2.
3. UNUSED FACILITIES NOT SHOWN IN BODY OF SCHEMATIC ARE AS FOLLOWS:
   J1-C J2-K, L, M, N, P
4. DIODE CR2 IN TRANSISTOR AMPLIFIER, AND DIODE CR13 ARE TEMPERATURE SENSING DIODES.
5. ▭ INDICATES EQUIPMENT MARKING.
6. LAMP SUPPLY VOLTAGE CHARACTERISTIC AS VIEWED ON A CALIBRATED OSCILLOSCOPE.

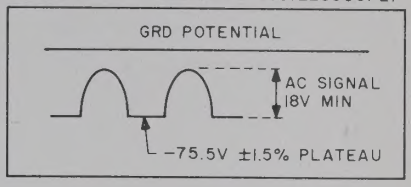

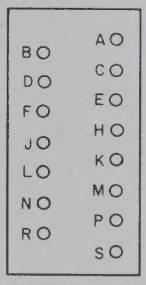

PIN VIEW OF
CONNECTORS
J1 & J2

7. CR12 IS A SILICON-CONTROLLED RECTIFIER.
8. T1 SECONDARY RATING: 11.5V, 1A.
9. T2 SECONDARY RATING: WINDING 5-6: 3V, .25A. WINDING 3-4: 34V, 2.7A

TM5840-219-35-C3-8

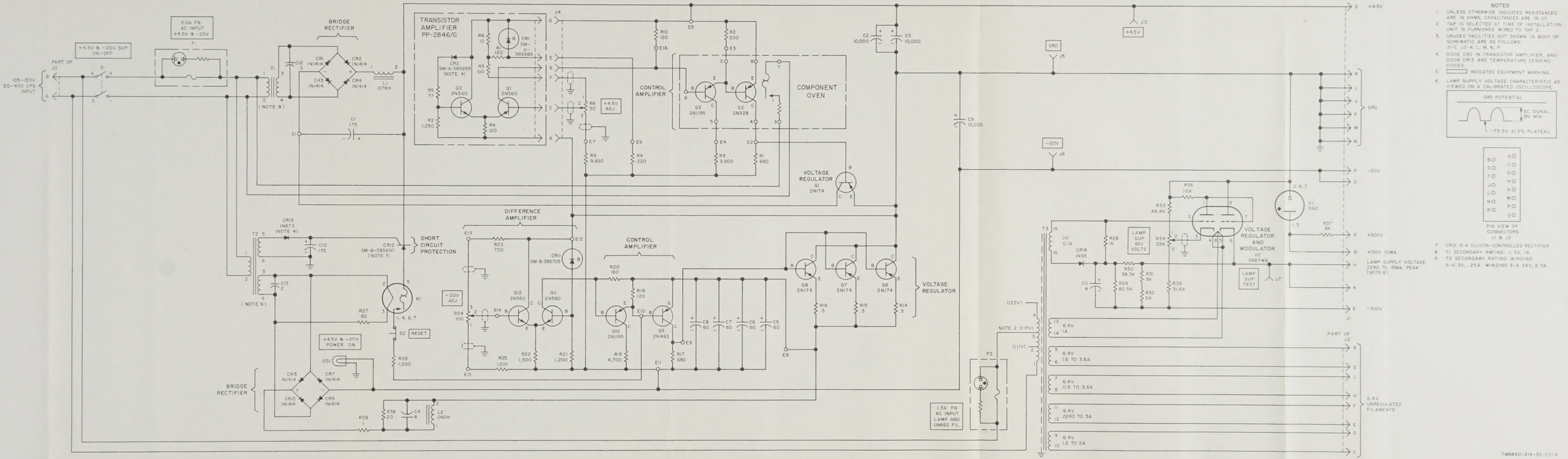
TRANSISTOR AMPLIFIER PP-2846/G
BRIDGE RECTIFIER
2.0A FN AC INPUT +4.5V & -20V
+4.5V & -20V SUP ON-OFF
105-130V 50-420 CPS INPUT
PART OF J2
T1
(NOTE 8)
CONTROL AMPLIFIER
COMPONENT OVEN
+4.5V ADJ
VOLTAGE REGULATOR Q1 2N174
DIFFERENCE AMPLIFIER
CONTROL AMPLIFIER
SHORT CIRCUIT PROTECTION
-20V ADJ
VOLTAGE REGULATOR
+4.5V & -20V POWER ON
RESET
BRIDGE RECTIFIER
1.5A FN AC INPUT LAMP AND UNREG FIL
LAMP SUP ADJ VOLTS
LAMP SUP TEST
VOLTAGE REGULATOR AND MODULATOR V2 5687WA
GRD POTENTIAL
AC SIGNAL .18V MIN
-75.5V ±1.5% PLATEAU
P/N VIEW OF CONNECTORS J1 & J2
NOTES:
1. UNLESS OTHERWISE INDICATED RESISTANCES ARE IN OHMS, CAPACITANCES ARE IN UF.
2. TAP IS SELECTED AT TIME OF INSTALLATION. UNIT IS FURNISHED WIRED TO TAP 2.
3. UNUSED FACILITIES NOT SHOWN IN BODY OF SCHEMATIC ARE AS FOLLOWS: J1-C J2-K, L, M, N, P.
4. DIODE CR2 IN TRANSISTOR AMPLIFIER, AND DIODE CR13 ARE TEMPERATURE SENSING DIODES.
5. INDICATES EQUIPMENT MARKING.
6. LAMP SUPPLY VOLTAGE CHARACTERISTIC AS VIEWED ON A CALIBRATED OSCILLOSCOPE.
7. CR12 IS A SILICON-CONTROLLED RECTIFIER.
8. T1 SECONDARY RATING: 11.5V, 1A.
9. T2 SECONDARY RATING: WINDING 5-6: 3V, .25A. WINDING 3-4: 34V, 2.7A.
+4.5V
GRD
-20V
+300V
+150V (OMA
LAMP SUPPLY VOLTAGE ZERO TO .15MA PEAK (NOTE 6)
-300V
6.4V UNREGULATED FILAMENTS
6.4V 1A
6.4V 1.6 TO 3.6A
6.4V 0.9 TO 3.6A
6.4V ZERO TO 3A
6.4V 1.2 TO 2A
TM5840-2/9-35-C3-8

Figure 181.2. Power Supply PP-2846/G, complete schematic diagram.

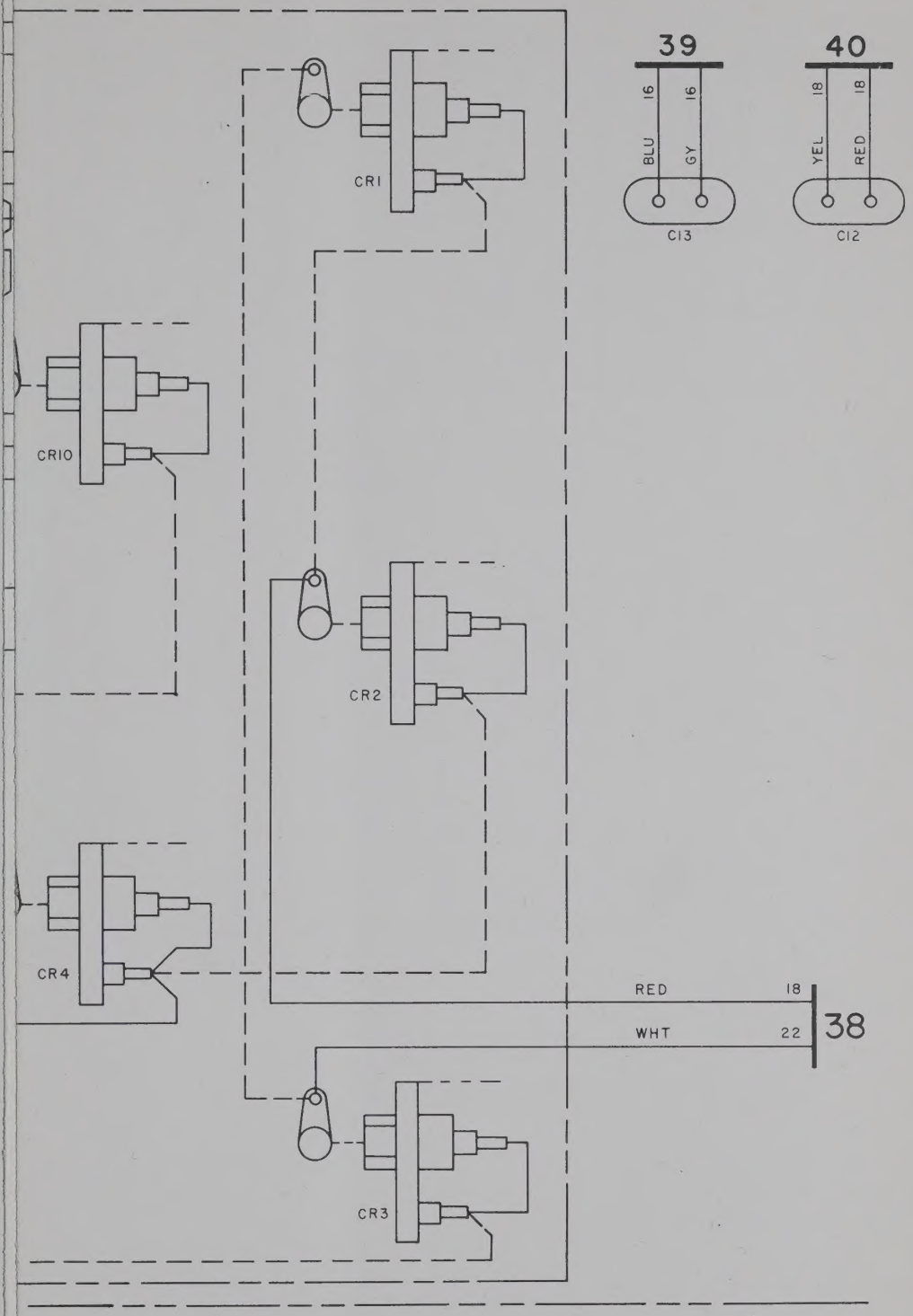

TM5840-219-35-C3-9

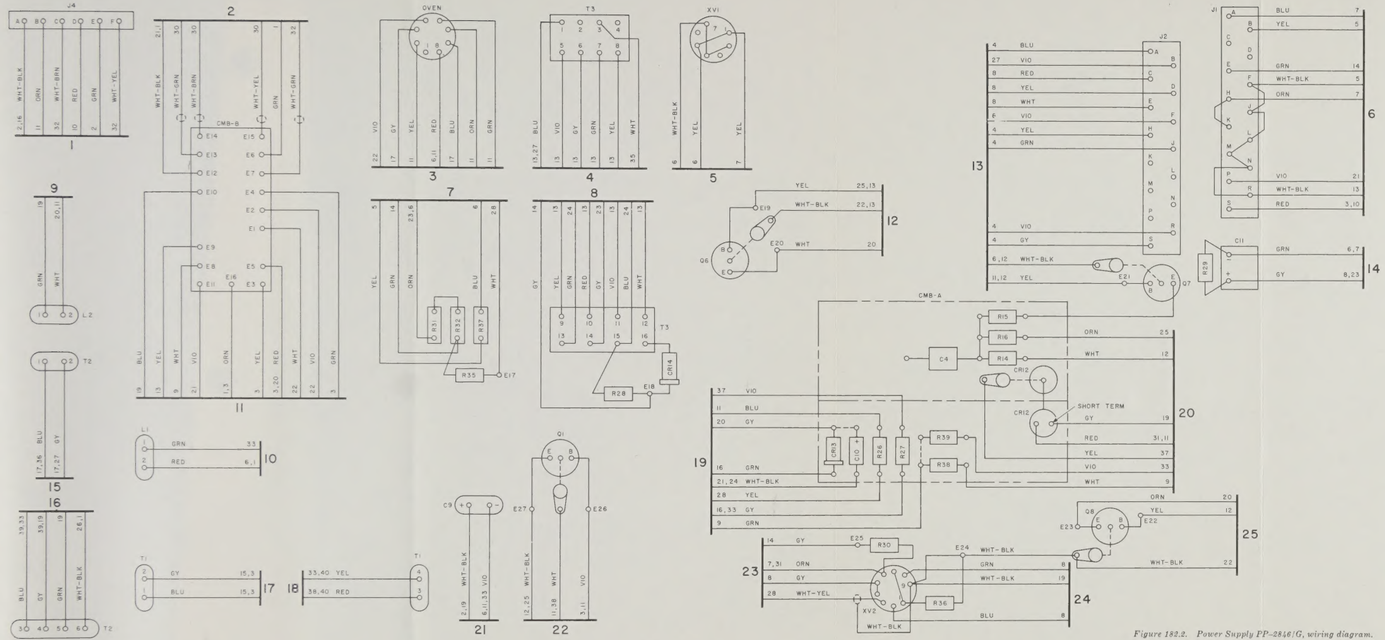

Figure 182.2. Power Supply PP-2846/G, wiring diagram.

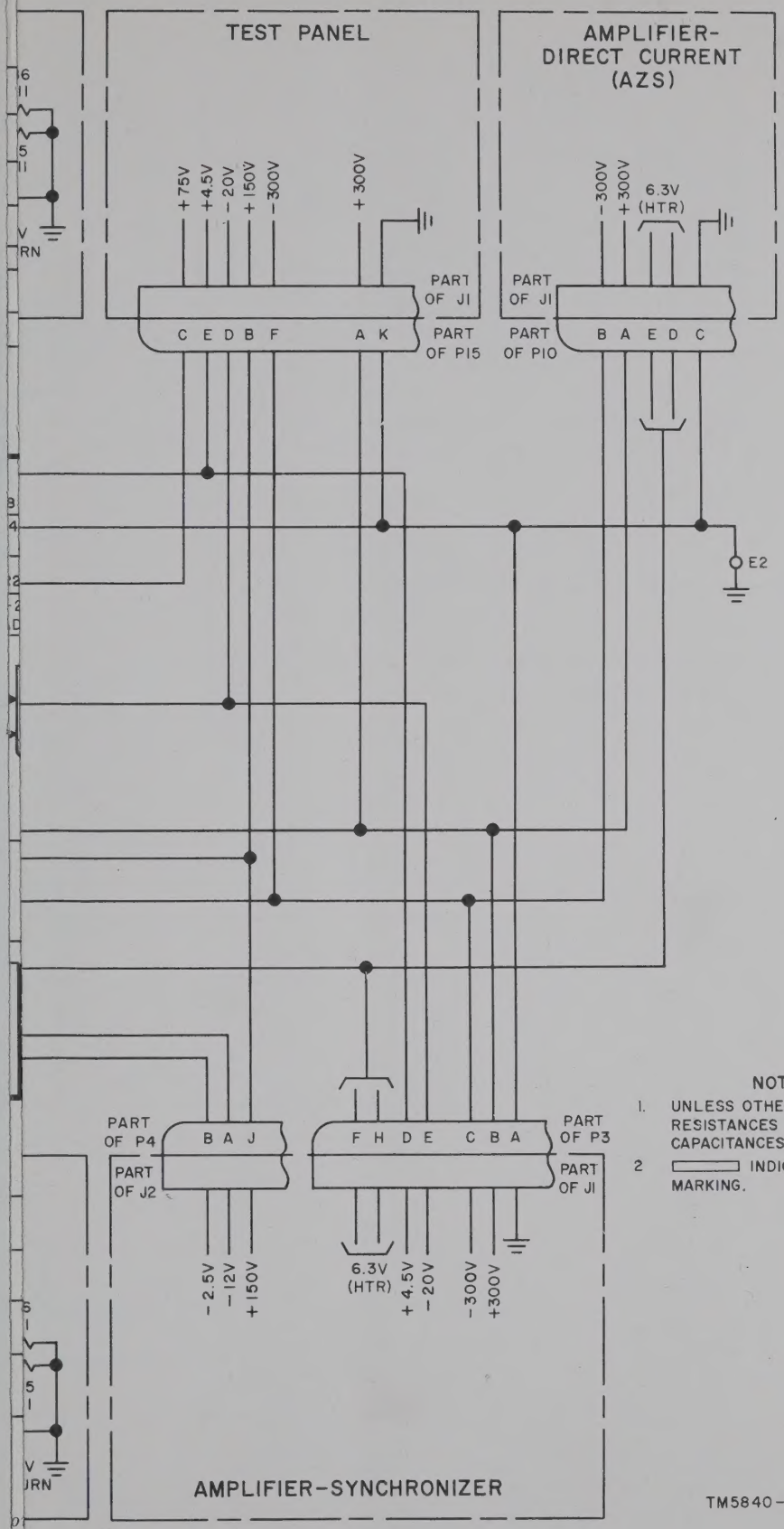

NOTES:

1. UNLESS OTHERWISE INDICATED; RESISTANCES ARE IN OHMS. CAPACITANCES ARE IN UF.
2. ▭ INDICATES EQUIPMENT MARKING.

TM5840-219-35-C3-13

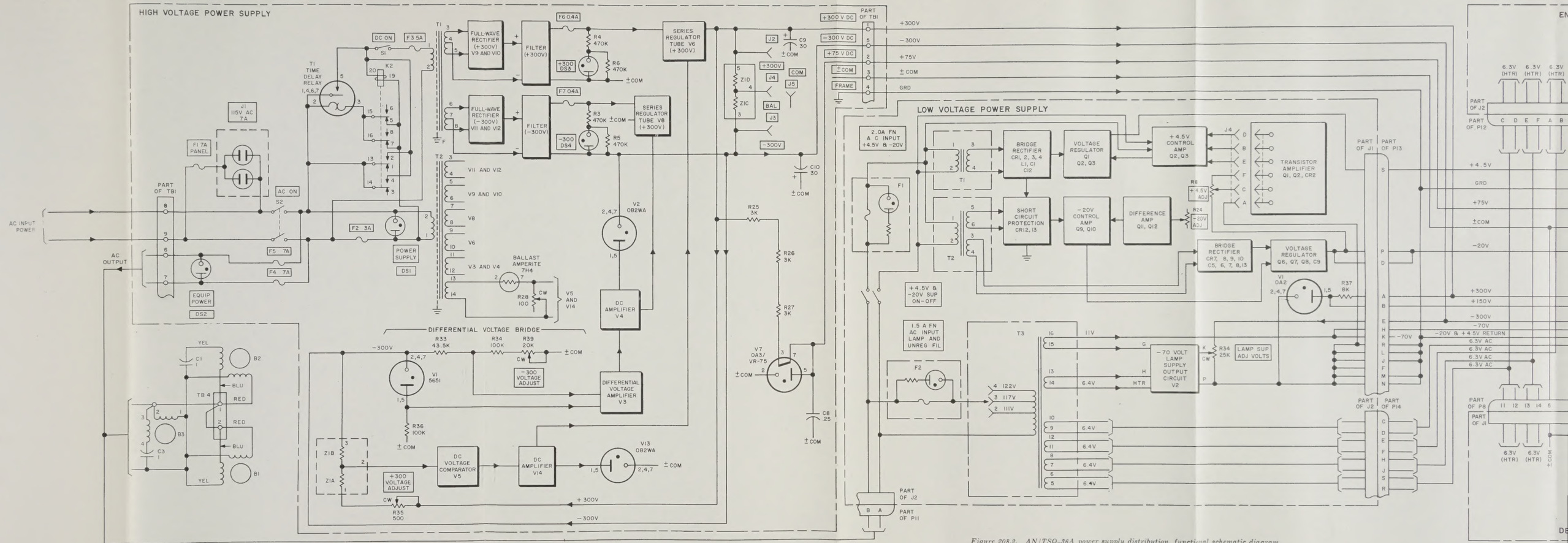

Figure 208.2. AN/TSQ-36A power supply distribution, functional schematic diagram.

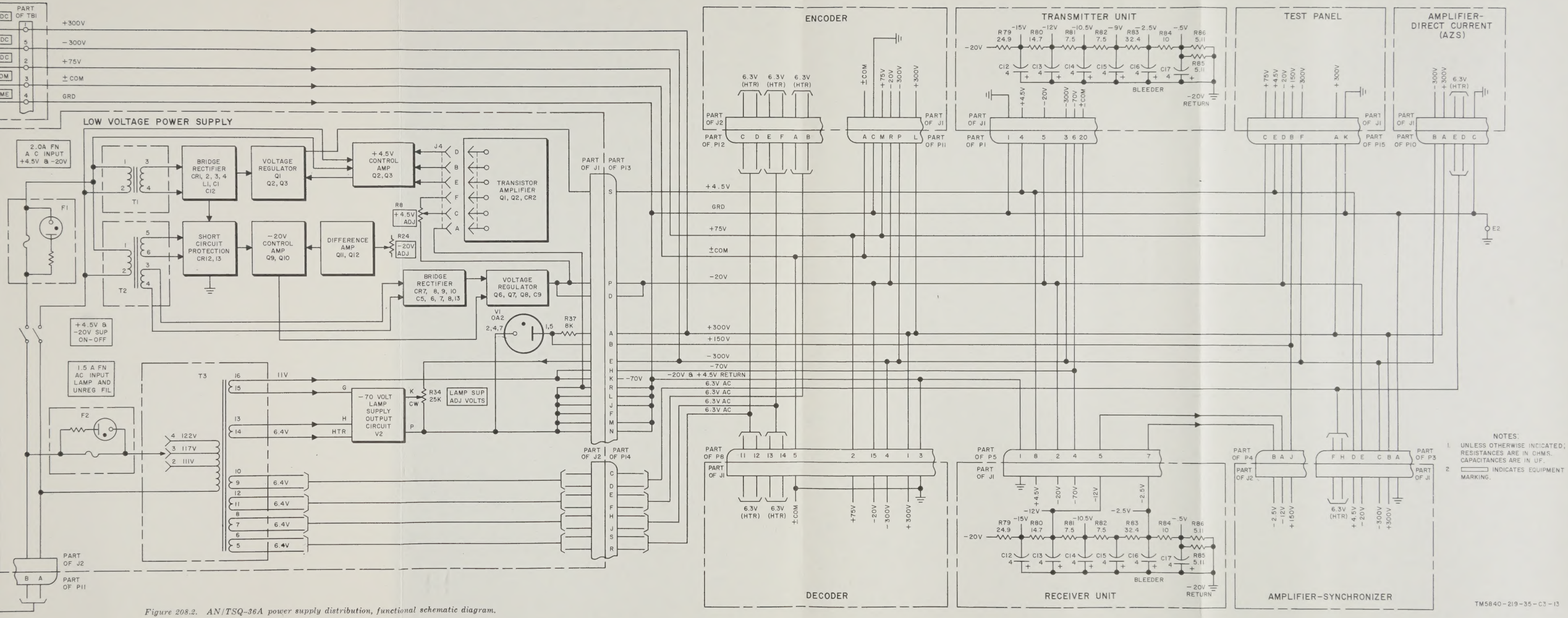

Figure 208.2. AN/TSQ-36A power supply distribution, functional schematic diagram.

Page 343, figure 196. Make the following changes:

At R17, add: (NOTE 5).

Add the following to the notes:

5. ON ORDER NO. 9337–PP–60–54 –54, R17 is 3,880 OHMS.

Page 346, figure 205. Make the following changes:

At the lower right, change the value of R17 from "4,220" to 3,880.

Add the following to the notes:

7. ON ORDER NO. 9337–PP–60–54 –54, R17 is 3,880 OHMS.

Figure 207 (part 1 of 2). Make the following changes:

Delete "P5–3" and "—300V" (at upper left).

Between P5–2 and P5–5 (at upper left). Add terminal 3. At the left of terminal 3, add: SERIAL DATA TO ASSOCIATED EQUIPMENT. Add a connection between terminal 3 and the input to J18–B. Near the SR13 A PKG block, change "S43A" to: **S54A.**

Figure 207 (part 2 of 2). In the "STORAGE LOCKUP, J46" block add: D PKG.

Figure 208 (fold-out) and figure 208.1 (fold-out page 30 of C 2). Make the following changes:

At V2 in the HIGH VOLTAGE POWER SUPPLY change "±COM" to: **—300V.**

At Z1, change "Z1A" to: **Z1B;** change terminal "1" to: **3;** change "Z1B" to: **Z1A.** Change terminal "3" to: **1.**

Add figure 208.2 after figure 208.1.

Figure 208.2. AN/TSQ–36A power supply distribution, functional schematic diagram.
(Located in back of manual)

BY ORDER OF THE SECRETARY OF THE ARMY:

G. H. DECKER,
General, United States Army,
Chief of Staff.

Official:

R. V. LEE,
Major General, United States Army,
The Adjutant General.

Distribution:

Active Army:

DASA (6)
USASA (2)
CNGB (1)
Tech Stf, DA (1) except
  CSigO (15)
Tech Stf Bd (1)
USCONARC (4)
USAARTYBD (1)
USAARMBD (2)
USAIB (1)
USARADBD (2)
USAABELCTBD (1)
USAAVNBD (1)
USAATBD (1)
ARADCOM (2)
ARADCOM Rgn (2)
OS Maj Comd (2)
OS Base Comd (2)
LOGCOMD (2)
MDW (1)
Armies (2)
Corps (5)
USATC AD (2)
USATC Armor (2)
USATC Engr (2)
USATC FA (2)
USATC Inf (2)
Svc College (2)
Br Svc Sch (2)
GENDEP (2) except
  Atlanta GENDEP (None)
Sig Sec, GENDEP (5)
Sig Dep (12)
Ft Monmouth (63)
AFIP (1)
WRAMC (1)
AFSSC (1)
USAEPG (2)
EMC (1)
USACA (2)
USASEA (1)
USA Carib Sig Agcy (1)
USA Sig Msl Spt Agcy (12)
USASSA (20)
USASSAMRO (1)
Army Pictorial Cen (2)
USAOMC (3)
USA Trans Tml Comd (1)
Army Tml (1)
POE (1)
OSA (1)
AMS (1)
Sig Fld Maint Shops (2)
JBUSMC (2)
Units organized under following TOE:
Two copies to each unit unless
  otherwise indicated:
11–7
11–16
11–57
11–98
11–117
11–155
11–500 (AA–AE) (4)
11–557
11–587
11–592
44–236
44–237
44–346
44–437
44–536
44–537

NG: None.

USAR: None.

For explanation of abbreviations used, see AR 320–50.

☆ U. S. GOVERNMENT PRINTING OFFICE: 1961—610503

Educational Development Branch
MOS Library
Bldg 401
Fort Knox, Kentucky 40121

TECHNICAL MANUAL

Field and Depot Maintenance

COORDINATE DATA SETS AN/TSQ-36 AND AN/TSQ-36A, AND COORDINATE DATA SET GROUPS OA-1425A/FSG-1 AND 1030

TM 11-5840-219-35
CHANGES No. 4

HEADQUARTERS,
DEPARTMENT OF THE ARMY
WASHINGTON 25, D.C., *6 August 1962*

TM 11-5840-219-35, 27 April 1959, is changed as follows so that the manual also applies to the following equipment:

Nomenclature	*Order No.*
Coordinate Data Set Group 1030	9046-PP-60-54-54

Change the title of the manual to: COORDINATE DATA SETS AN/TSQ-36 AND AN/TSQ-36A, AND COORDINATE DATA SET GROUPS OA-1425A/FSG-1 AND 1030.

Note. The parenthetical reference to previous Changes (example: "page 1 of C1") indicates that pertinent material was published in that Changes.

Page 2, figure 1.1 (page 3 of C2). Change the caption to: *Coordinate Data Set Groups OA-1425A/FSG-1 and 1030.*

Page 3 (page 2 of C2). Delete the note below the title of chapter 1 and substitute:

Note. Coordinate Data Sets AN/TSQ-36 and AN/TSQ-36A and Coordinate Data Set Groups OA-1425A/FSG-1 and 1030 are similar. Information in this manual applies to all four units unless otherwise specified.

Paragraph 1. Make the following changes:

Subparagraph *a,* line 4. After "(fig. 1)." Add: Coordinate Data Set Groups OA-1425A/FSG-1 and 1030 (fig. 1.1), and Coordinate Data Set AN/TSQ-36A (fig. 1.2).

Subparagraph *b.1* (page 2 of C2). After subparagraph *b.1.* Add:

b.2. Coordinate Data Set Group 1030 is used in the Fire Unit Integration Facility Subsystem (FUIF) of Antiaircraft Defense Systems AN/GSG-5(V) and AN/GSG-6. For details regarding the application of this equipment, refer to the literature covering Antiaircraft Defense Systems AN/GSG-5(V) and AN/GSG-6, Fire Unit Integration Facility (FUIF) Subsystem.

Page 4, paragraph 4*f.* Delete the second sentence and substitute:

The message consists of a remote agc level set signal (used only in the AN/FSG-1, AN/GSG-5(V), and AN/GSG-6 Systems), a synchronizing word (ready interval), which is a group of special signals used for synchronizing the receiver, and the message proper, which is a series of binary digits. The remote agc level set signal in the AN/FSG-1 System consists of 8 time slots of 1,500-cps tone transmitted approximately 14 time slots before the beginning of the data frame and is used to stabilize the agc circuits in the remote receiver. The remote agc level set signal in the AN/GSG-5(V) and AN/GSG-6 Systems consists of a steady 1,500-cps tone between data frames to stabilize the agc circuits of the remote receiver.

Figure 2. (Superseded) *Typical cycle of transmitted message.*
(Located in back of manual)

Page 5, paragraph 5. Make the following changes:

Subparagraph *a* (page 2 of C2), line 12. Change "Unit" to "Units" and after "R-975/FSG-1," add: and 1032.

Subparagraph *b.* Delete subparagraph *b* and substitute.

b. Power Requirements.

Voltage .....105 to 130 volts.

Frequency:

AN/TSQ-36 .....60-cycle, single-phase.

AN/TSQ-36A .....50 through 420 cycles, single phase.

OA-1425A/FSG-1 and 1030 .....400 cycles, single-phase.

Power .....Approximately 620 watts.

Page 6, paragraph 6*d.1* (page 2 of C2). Heading. After OA–1425A/FSG–1." Add: and 1030.

Paragraph 7 (page 3 of C3). Make the following changes:

Second sentence. After "OA–1425A/FSG–1." Add: and 1030.

Subparagraph *a*. Make the following changes:

Nomenclature column. Line 5. Change "Unit" to: Units.

Line 6. After "T–721/TSQ–36." Add: and 1033.

Line 7. Change "Unit" to: Units.

Line 8. Add: AM–2450/FSG–1, and 1034.

Line 9. Change "Unit" to: Units.

Line 10. Add: R–975/FSG–1, and 1032.

Delete the entry for "Low voltage Power Supply" (page 3 of C3) and substitute:

Common name	*Nomenclature*
Low voltage power supply:	
AN/TSQ–36	Power Supply PP–2235/G.
AN/TSQ–36A	Power Supply PP–2846/G.
OA–1425A/FSG–1 and 1030	Power Supply PP–2517/G.

Paragraph 8. Heading (page 3 of C3). After "OA–1425A/FSG–1." Add: and 1030.

Page 7, paragraph 8. Make the following changes:

Subparagraph *c*. Heading. After "T–721/TSQ–36." Add: and 1033.

Subparagraph *d*. Heading. After "AM–2126/TSQ–36." Add: and 1034.

Page 8, paragraph 8*d* (page 4 of C2), last line. After "OA–1425A/FSG–1." Add: and 1030.

Subparagraph *e*. Heading. After "R–975/FSG–1." Add: and 1032.

Paragraph 9.1 (page 4 of C3). Make the following changes:

Line 2. Delete "and."

Line 3. After "OA–1425A/FSG–1." Add: and Coordinate Data Set Group 1030."

Subparagraphs *a*, *b*, and *e*. Last lines. After "OA–1425A/FSG–1." Add: and 1030.

Subparagraph *c*, line 3. After "OA–1425A/FSG–1." Add: and 1030.

Subparagraph *d*, line 3. After "OA–1425A/FSG–1." Add: and 1030. Change "has" to: have.

Subparagraph *g*. Delete the chart and substitute.

Coordinate Data Set AN/TSQ–36	Coordinate Data Set AN/TSQ–36A	Coordinate Data Set Group OA–1425A/FSG–1	Coordinate Data Set Group 1030
Coordinate Data Transmitter Unit T–721/TSQ–36.	Coordinate Data Transmitter Unit T–721/TSQ–36.	Coordinate Data Transmitter Unit T–721/TSQ–36.	Coordinate Data Transmitter Unit 1030.
Electrical Test Panel SB–976/TSQ–36.	Electrical Test Panel SB–976/TSQ–36.	Electrical Test Panel SB–976A/TSQ–36.	Electrical Test Panel SB–976A/TSQ–36.
Amplifier-Synchronizer Unit AM–2126/TSQ–36.	Amplifier-Synchronizer Unit AM–2126/TSQ–36.	Amplifier-Synchronizer Unit AM–2450/FSG–1.	Amplifier-Synchronizer Unit 1034.
Coordinate Data Receiver Unit R–930/TSQ–36.	Coordinate Data Receiver Unit R–930/TSQ–36.	Coordinate Data Receiver Unit R–975/FSG.	Coordinate Data Receiver Unit 1032.
Power Supply PP–2235/G.	Power Supply PP–2846–G.	Power Supply PP–2517/G.	Power Supply PP–2517/G.

Page 9, paragraph 11.1 (page 5 of C2). Heading. After "OA–1425A/FSG–1." Add: and 1030.

Page 11, paragraph 14*a.1* (page 5 of C2). Heading. After "OA–1425A/FSG–1." Add: AN/TSQ–36A, and 1030.

Figure 7.1 (foldout in C2). Caption. After "OA–1425A/FSG–1." Add: and 1030.

Page 12, paragraph 16.1 (page 5 of C2). After "OA–1425A/FSG–1." Add: and 1030.

Line 1. Change "Group" to: Groups and after "OA–1425A/FSG–1." Add: and 1030.

Page 14, paragraph 19.1 (page 5 of C2). Heading. After "OA–1425A/FSG–1." Add: and 1030.

Page 15, table III (page 6 of C2). "Position" column. After "OA–1425A/FSG–1." Add: and 1030.

Page 18, table IV (pages 6 and 7 of C2). Steps 7.1, 8.1, and 9.1 "Unit" columns lines 2. After "AM–2450/FSG–1." Add: and 1034.

Page 22, paragraph 26.1 (page 7 of C2). Heading. After "OA–1425A/FSG–1." Add: and 1030.

Page 24, paragraph 29. "Function" column, opposite "LOCAL," line 2. After "pad." Add: and AT2.

Page 25, paragraph 30 (page 8 of C2). Last line. "Function" column. After "OA–1425A/FSG–1." Add: and 1030.

Page 27, figure 9. Line 1 of note (page 1 of C2). After "OA–1425A/FSG–1." Add: AND 1030.

Caption (page 5 of C3). After "T–721/TSQ–36." Add: *and 1033.*

Page 28, paragraph 31 (page 8 of C2). "Function" column, opposite "OC," line 2. After "OA–1425A/FSG–1." Add: and 1030.

Page 29, figure 11. Make the following changes:

In the note (page 1 of C2), change "UNIT" to "UNITS" and after "AM–2450/FSG–1." Add: AND 1034.

Caption (page 8 of C2). After "AM–2450/FSG–1." Add: and 1034.

Page 32, paragraph 32 (page 8 of C2). "Function" column, last line. After "OA–1425A/FSG–1." Add: and 1030.

Page 33, figure 12 (page 1 of C2). In the note, change "UNIT" to: "UNITS" and after "R–975/FSG–1." Add: AND 1032.

Caption (page 8 of C2). After "R–975/FSG–1." Add: and 1032.

Page 40, paragraph 37*g*, (page 8 of C2). Heading. After "OA–1425A/FSG–1." Add: *and 1030.*

Page 41, figure 17 (page 8 of C2). Last line of the note. After "OA–1425A/FSG–1." Add: AND 1030.

Page 42, paragraph 38*j* (page 8 of C2). Heading. After "OA–1425A/FSG–1." Add: and 1030.

Subparagraph *1.1* (page 8 of C2). Heading and line 5. After "OA–1425A/FSG–1." Add: *and 1030.*

Page 44, paragraph 39*g*. Make the following changes:

Subparagraph (1) (page 10 of C2). Last line. After "OA–1425A/FSG–1." Add: and 1030.

Subparagraph (2) (page 10 of C2). Second sentence. After "OA–1425A/FSG–1." Add: and 1030.

Figure 18.1 (page 10 of C2). Caption. After *"OA–1425A/FSG–1."* Add: *and 1030.*

Page 50, table V. "Operation" column, step 3*h*, line 7 (page 10 of C2). After "OA–1425A/FSG–1." Add: or 1030.

Page 61, figure 26. Make the following changes:

Note 4 (page 1 of C2). After "OA–1425A/FSG–1." Add: AND 1030.

Add note 5.

5. THE REMOTE AGC LEVEL SET SIGNAL GATE IS USED ON THE 1033 COORDINATE DATA TRANSMITTER ONLY.

Output information to the right of the "SHIFT REGISTER" block, last line. After "TIMING SIGNALS." Add: AND REMOTE AGC LEVEL SET SIGNAL BETWEEN DATA FRAMES (1033 TRANSMITTER ONLY).

Add the "REMOTE AGC LEVEL SET SIGNAL GATE" block in the lower right corner as shown below:

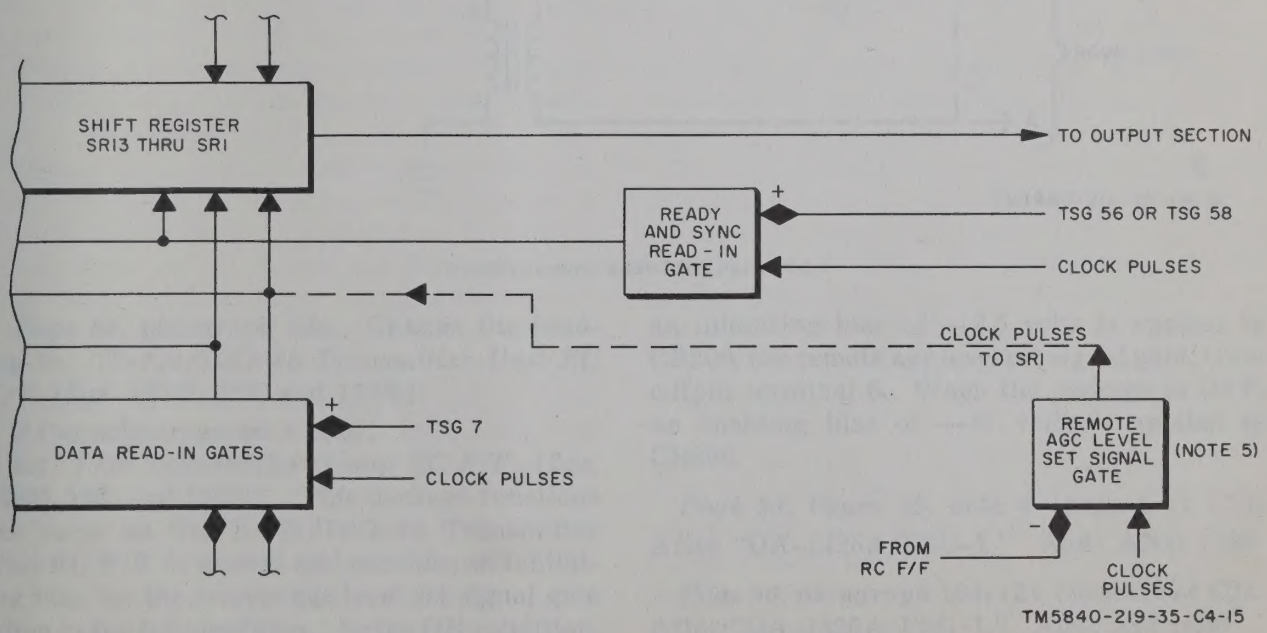

Remote AGC level set signal gate, added to figure 26.

Page 62, paragraph 62. Add subparagraph *d* after subparagraph *c*:

d. In the 1033 coordinate data transmitter unit, at the end of the frame at TS 54 (remote operation), the remote agc level set signal gate is enabled by a positive bias from the RC F/F. This allows clock pulses to pass through the gate to shift register 1 (SR1) where they are shifted out to initiate a continuous 1,500-cycle tone remote agc level set signal between data frames. The gate is closed as a result of the remote-start signal at the beginning of the next data frame.

Page 64, figure 28. Note 4 (page 1 of C2). Change "UNIT" to "UNITS" and after "AM–2450/FSG–1." Add: AND 1034.

Page 66, figure 30. Make the following changes:

Note 4 (page 1 of C2). Change "UNIT" to "UNITS" and after "R–975/FSG–1." Add: AND 1032.

Note 5 (page 1 of C2). After "OA–1425A/FSG–1." Add: AND 1030.

Page 70, paragraph 69 (page 10 of C2). After "OA–1425A/FSG–1." Add: and 1030.

Page 71, figure 33 (page 2 of C2). In the note, after "OA–1425A/FSG–1." Add: AND 1030.

Page 72, figure 34 (page 2 of C2). In the note, after "OA–1425A/FSG–1." Add: AND 1030.

Page 77, figure 38.1 (page 14 of C2). Reverse the polarity of the diode connected between the BLK and the bottom YEL lead of CR1; the cathode (bar) connects to the YEL lead.

Page 78, figure 40 (page 2 of C2). In note 1, after "OA–1425A/FSG–1." Add: AND 1030.

Page 81, figure 42.1 (page 18 of C2). Make the following changes in the detail circuitry at D and E:

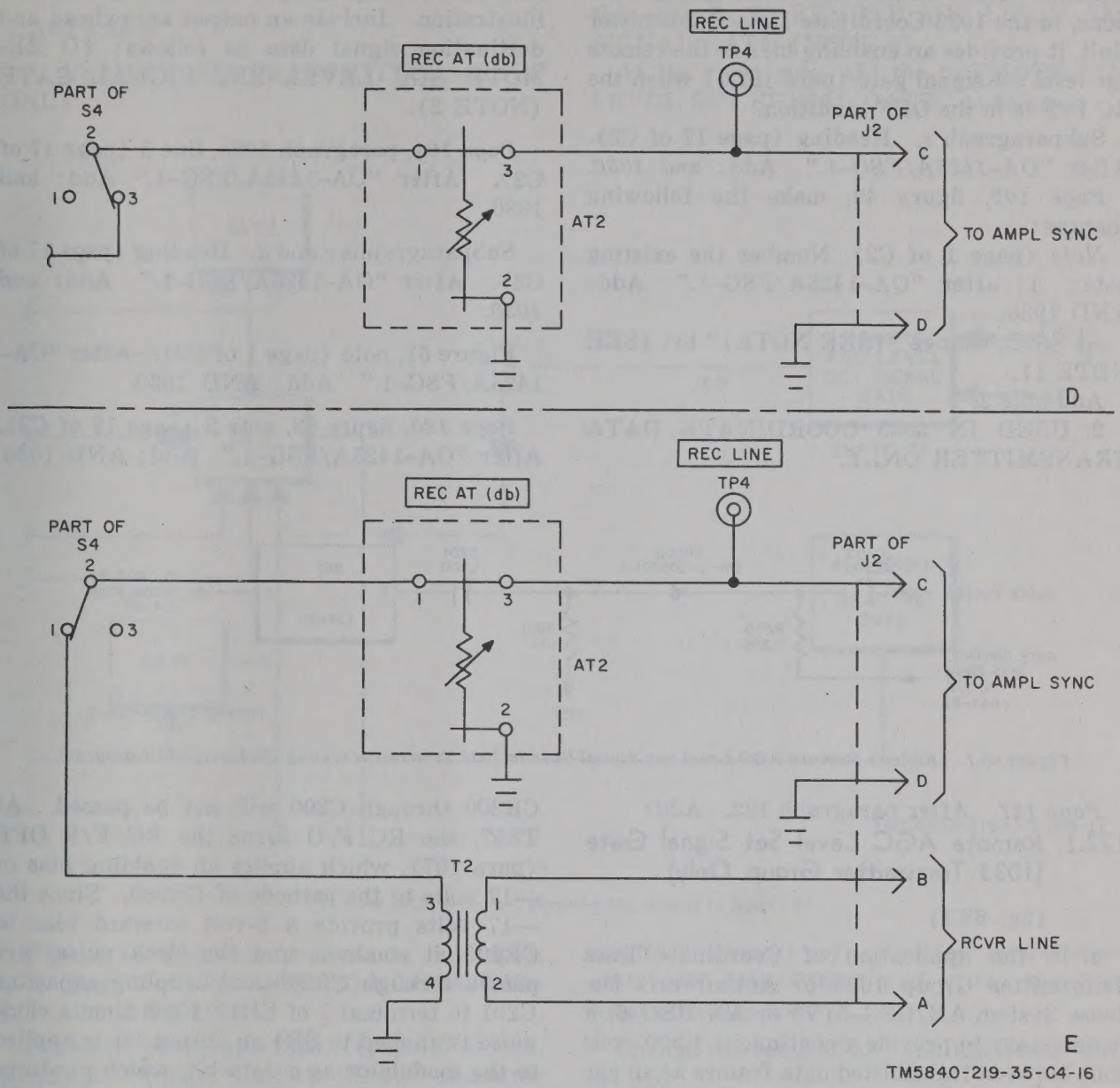

Circuit changes, added to figure 42.1.

Page 83, paragraph 94*a*. Change the heading to: *"T–721/TSQ–36 Transmitter Unit RC F/F* (figs. 163②, 133, and 159②).

After subparagraph *a*. Add:

a.1. 1033 Transmitter Group RC F/F. (figs. 163②, 133, and 159②). This package functions the same as the T–721/TSQ–36 Transmitter Unit RC F/F (*a* above) and provides an inhibiting bias for the remote agc level set signal gate when in the ON condition. In the ON condition, an inhibiting bias of —2.5 volts is applied to CR200, the remote agc level set signal gate, from output terminal 6. When the package is OFF, an enabling bias of —17 volts is applied to CR200.

Page 95, figure 43, note 4 (page 1 of C2). After "OA–1425A/FSG–1." Add: AND 1030.

Page 96, paragraph 104*c*(2) (page 17 of C2), After "OA–1425A/FSG–1." Add: and 1030.

Page 101, paragraph 107*a*. After the last sentence. Add: In addition to the above functions, in the 1033 Coordinate Data Transmitter Unit, it provides an enabling bias to the remote agc level set signal gate (para 122.1) when the RC F/F is in the OFF condition.

Subparagraph *c*. Heading (page 17 of C2). After *"OA–1425A/FSG–1."* Add: *and 1030.*

Page 102, figure 49, make the following changes:

Note (page 1 of C2). Number the existing note: 1; after "OA–1425A/FSG–1." Add: AND 1030.

At S60B, change "(SEE NOTE)" to: (SEE NOTE 1).

Add note 2.

2. USED IN 1033 COORDINATE DATA TRANSMITTER ONLY.

Add a dashed output line from terminal 6 of the RC F/F extending to the left side of the illustration. Include an output arrowhead and destination signal data as follows: TO REMOTE AGC LEVEL SET SIGNAL GATE (NOTE 2).

Page 104, paragraph 108*a*, line 9 (page 17 of C2). After "OA–1425A/FSG–1." Add: and 1030.

Subparagraphs *c* and *d*. Heading (page 17 of C2). After "OA–1425A/FSG–1." Add: ***and 1030.***

Figure 51, note (page 1 of C2). After "OA–1425A/FSG–1." Add: AND 1030.

Page 120, figure 63, note 2 (page 17 of C2). After "OA–1425A/FSG–1." Add: AND 1030.

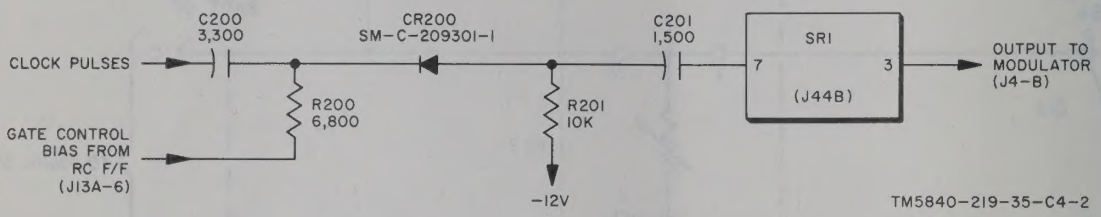

Figure 68.1. (Added) *Remove AGC Level Set Signal Gate in 1033 Transmitter, simplified schematic diagram.*

Page 127. After paragraph 122. Add:

122.1. Remote AGC Level Set Signal Gate (1033 Transmitter Group Only)

(fig. 68.1)

a. In the application of Coordinate Data Transmitter Group 1033 to Antiaircraft Defense System AN/GSG–5(V) or AN/GSG–6, it is necessary to provide a continuous 1,500-cycle tone between transmitted data frames as an agc level set signal to stabilize the remote receiver. This is accomplished by continuously setting a ONE bit into SR1 and shifting the ONE out as a data bit to the modulator for transmission, which produces a steady string of ONE bits (2 cycles of 1,500-cycle tone) as the transmitter output.

b. During a data frame, the RC F/F is in an ON condition (pars. 94*a.1* and 107) and provides a bias of —2.5 volts through R200 to the cathode of CR200. Since the anode of CR200 is back-biased at —12 volts through R201, CR200 will not conduct and clock pulses applied to CR200 through C200 will not be passed. At TS57, the RC F/O turns the RC F/F OFF (para 107), which applies an enabling bias of —17 volts to the cathode of CR200. Since the —17 volts provide a 5-volt forward bias to CR200, it conducts and the clock pulses are passed through CR200 and coupling capacitor C201 to terminal 7 of SR1. Each time a clock pulse is applied to SR1 an output bit is applied to the modulator as a data bit, which produces a transmitter output of a steady string of ONE bits (pars. 120 and 122). At the beginning of the next data frame, a remote start pulse turns the RC F/F ON (pars. 94*a.1* and 107), which disables the gate (back biases CR200) and terminates the transmission of the remote agc level set signal.

Page 128, figure 69, note (page 1 of C2). After "OA–1425A/FSG–1." Add: AND 1030.

Page 129, figure 70, note 4 (page 1 of C2). After "OA–1425A/FSG–1." Add: AND 1030.

Page 141, figure 81 (fold-out in separate envelope). Make the following changes:

Notes 6 and 7 (page 1 of C2). After "OA–1425A/FSG–1." Add: AND 1030.

Add note 8.

8. USED IN 1033 TRANSMITTER GROUP ONLY.

At the left side, at RC F/F, add a dashed negative bias output (see NOTE 1) and label this output: TO REMOTE AGC LEVEL SET SIGNAL GATE (NOTE 8).

At the right side, add the "REMOTE AGC LEVEL SET SIGNAL GATE" as follows:

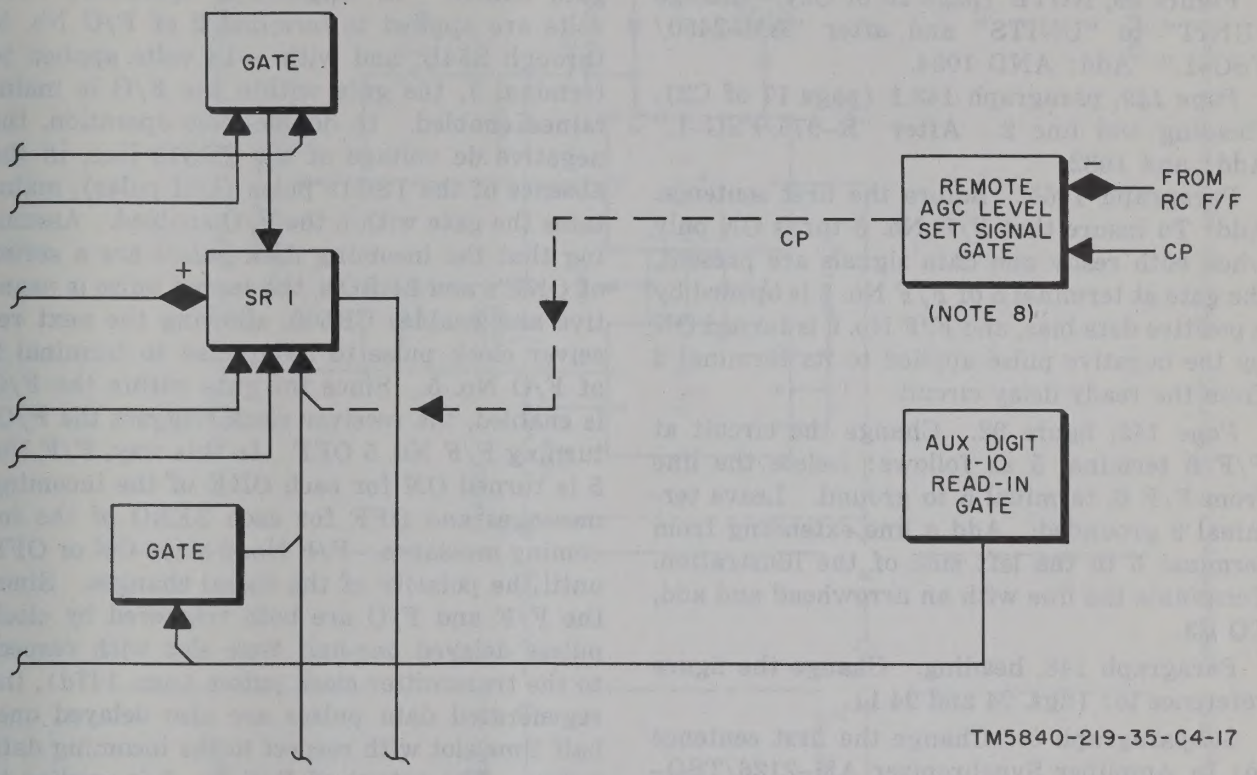

Remote AGC level set signal gate, added to figure 81.

Figure 82 (fold-out in separate envelope), note (page 1 of C2). After "OA–1425A/FSG–1." Add: AND 1030.

Page 142, paragraph 136*b.1* (page 17 of C2). Heading. Change "Unit" to "Units" and after "R–975/FSG–1." Add: *and 1032.*

Page 143, figure 83 (fold-out, in C3). Add the following note:

NOTE:
IN AMPLIFIER SYNCHRONIZER UNITS AM–2450/FSG–1 AND 1034, OC–CDG/TAC SWITCH S1 MUST REMAIN IN THE CDG/TAC POSITION.

Paragraph 137*b,* heading (page 17 of C2). After *"OA–1425A/FSG–1."* Add: *and 1030.*

Figure 84.1 (page 19 of C2). Make the following changes: Change the caption to: *AGC amplifier circuits of amplifier synchronizer units AM–2450/FSG–1 and 1034, simplified schematic diagram.*

Change the value of R37 and R38 from "487" to: 316.

Change the value of R39 from "121" to: 422.

Page 148, figure 88.1 (foldout in C2). Make the following changes:

Number the existing note: 1.

Add notes 2 and 3.

2. USED IN COORDINATE DATA SET GROUP OA–1425A/FSG–1 ONLY.

3. USED IN COORDINATE DATA SET GROUP 1030 ONLY.

Change the waveform for "F/F 7 FOR REMOTE START OPERATION" to the following:

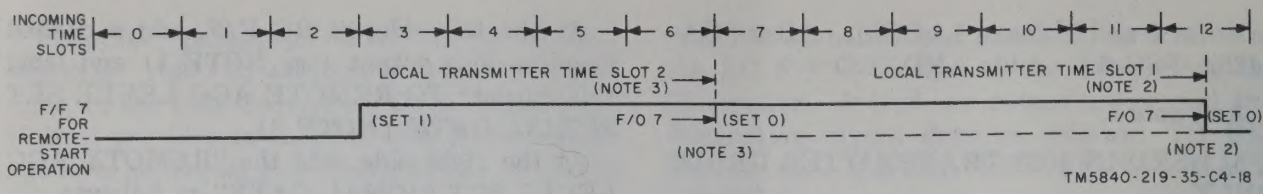

Modified waveform, added to figure 88.1.

Figure 89, NOTE (page 20 of C2). Change "UNIT" to "UNITS" and after "AM–2450/FSG–1." Add: AND 1034.

Page 149, paragraph 143.1 (page 17 of C2). Heading and line 2. After "R–975/FSG–1." Add: and 1032.

Paragraph 146*b*. Before the first sentence. Add: To insure that F/F No. 6 turns ON only when both ready and data signals are present, the gate at terminal 5 of F/F No. 6 is opened by a positive data bias, and F/F No. 6 is turned ON by the negative pulse applied to its terminal 2 from the ready delay circuit.

Page 152, figure 92. Change the circuit at F/F 6 terminal 5 as follows: Delete the line from F/F 6, terminal 5 to ground. Leave terminal 9 grounded. Add a line extending from terminal 5 to the left side of the illustration. Terminate the line with an arrowhead and add, TO E3.

Paragraph 148, heading. Change the figure reference to: (figs. 94 and 94.1).

Subparagraph *b*. Change the first sentence to: In Amplifier Synchronizer AM–2126/TSQ–36, data pulses from the data slicer are applied to terminal 5 of F/F No. 5 (par. 94*f*) and terminal 2 of F/O No. 5 (par. 96*k*) through R13.

Page 154, figure 94. Change the caption to: *Data sampling control of Amplifier Synchronizer AM–2126/TSQ–36, simplified schematic diagram.*

After paragraph 148*b*. Add:

c. In Amplifier Synchronizer AM–2450/FSG–1 and 1034, data pulses from the data slicer are applied to terminal 5 of F/F No. 5 (par. 94*f*) and to CR500 through R13. Receiver clock pulses are applied to terminal 2 of F/F No. 5 and terminal 2 of F/O No. 5 through C1, CR500, and C500. The first positive data pulse enables the gate at terminal 5 of F/F No. 5, and the next clock pulse at terminal 2 turns F/F No. 5 ON. F/O No. 5 is not affected by the clock pulse because the positive data pulse has disabled gate CR500. In single-scale operation, —15 volts are applied to terminal 2 of F/O No. 5, through S54B, and with —12 volts applied to terminal 7, the gate within the F/O is maintained enabled. In double-scale operation, the negative dc voltage of the TSG19 line, in the absence of the TSG19 pulse (DSI pulse), maintains the gate within the F/O enabled. Assuming that the incoming data pulses are a series of ONE's and ZERO's, the second pulse is negative and enables CR500, allowing the next receiver clock pulse to be applied to terminal 2 of F/O No. 5. Since the gate within the F/O is enabled, the receiver clock triggers the F/O, turning F/F No. 5 OFF. In this way, F/F No. 5 is turned ON for each ONE of the incoming messages and OFF for each ZERO of the incoming messages. F/F No. 5 stays ON or OFF until the polarity of the signal changes. Since the F/F and F/O are both triggered by clock pulses delayed one-half time slot with respect to the transmitter clock pulses (par. 147*d*), the regenerated data pulses are also delayed one-half time slot with respect to the incoming data pulses. The output of F/F No. 5 is applied to the serial adder (par. 167).

d. Since the 11th digit of the H coordinate word is not transmitted in double-scale operation (par. 178), it is necessary to generate a ONE in this digit. A TS19, the positive 1.3-millisecond TSG19 pulse, called the double-scale inhibit (DSI) pulse, is applied through R506 to terminal 2 of F/O No. 5. This positive DSI pulse disables the gate within the F/O, thereby preventing F/O No. 5 from being triggered by the receiver clock pulse and turning F/F No. 5 OFF. At the same time, TSG19 enables CR17 in the R/N package of the receiver and with CR22 forward-biased, a negative clock pulse, called the double-scale height (DSH) pulse, is applied through CR17, C14, CR22, and C15 to the base (terminal 7) of F/F No. 5. This negative DSH pulse turns F/F No. 5 ON and a ONE bit is applied to the serial adder (para 167) as the 11th digit of the H coordinate word.

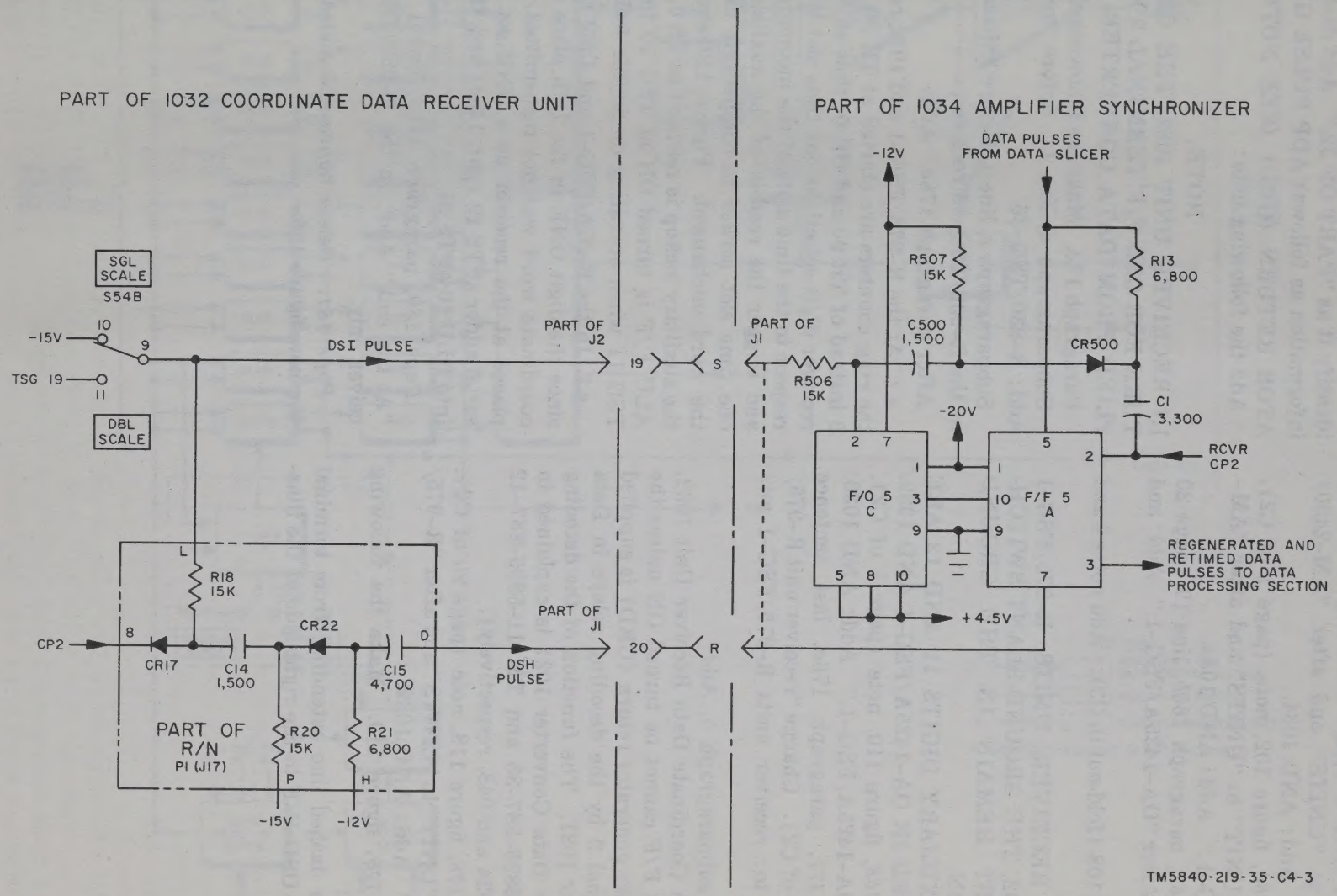

Figure 94.1. (Added) *Data sampling control of Amplifier Synchronizer AM-2450/FSG-1 and 1034, simplified schematic diagram.*

Page 159, figure 101 (fold-out in separate envelope), note 4 (page 1 of C2). Change "UNIT" to "UNITS" and after "AM–2450/FSG–1." Add: AND 1034.

Page 160, figure 102, note (page 1 of C2). Change "UNIT" to "UNITS" and after "AM–2450/FSG–1." Add: AND 1034.

Page 167, paragraph 166*b*, line 19 (page 20 of C2). After "OA–1425A/FSG–1." Add: and 1030.

Figure 108 (fold-out in C3). Add notes 4 and 5.

4. IN RECEIVER UNITS R–975/FSG–1 AND 1032, THE GROUND-SLANT SWITCHES MUST REMAIN IN THE GROUND POSITION.

5. AUXILIARY DIGITS 11 AND 12 ARE NOT USED IN OA–1425A/FSG–1 AND 1030.

Page 168, figure 110, note (page 1 of C2). After "OA–1425A/FSG–1." Add: AND 1030.

Page 177, paragraph 176*a*, last sentence (page 20 of C2). Change "receiver unit R–975/FSG–1" to: receiver units R–975/FSG–1 and 1032.

After subparagraph *b*, Add:

b.1. In Coordinate Data Receiver Unit 1032, the OSD F/F cannot be turned ON unless the ADP pulse generator return (GRD) is supplied to terminal 9 by the decoding relays in Data Converter 1021. The function of the decoding relays in Data Converter 1021 is explained in TM 11–5895–287–35 and TM 11–5895–287–12 (WSM 024 and 048, respectively).

Page 178, figure 118, note (page 20 of C2). Change "UNIT" to "UNITS" and after "R–975/FSG–1." Add: AND 1032.

Page 179, figure 119. Make the following changes:

Add a dashed line extending from terminal 9 of the OSD F/F to the right side of the illustration, terminating with a male jack connector symbol. Label the jack symbol as pin 15 and identify it as "PART OF J2." Add destination information as follows: ADP PULSE GENERATOR RETURN (GRD) (SEE NOTE).

Add the following note:

NOTE:

IN RECEIVER UNIT 1032, THE GRD RETURN FOR OSD F/F TERMINAL 9 IS SUPPLIED FROM DATA CONVERTER 1021.

Paragraph 178. Make the following changes:

Subparagraph *d*, line 1. Before "receiver." Add: R–930/TSQ–36.

Subparagraph *e*, line 1. Before "Since." Add: In the R–930/TSQ–36 receiver, .

After paragraph 178*e*. Add:

e.1. At the R–975/FSG–1 and 1032 receivers, the ring counters are started at TR 50 and UR 9 instead of TR 00 and UR 0; thus shifting the receiver digit selections one time slot *later* with respect to the time slots of the incoming frame, and trigger the read-in of the auxiliary word one time slot *earlier* to compensate and leave the word unchanged. Figure 118 shows that the auxiliary lockup is released at TS 0, and the ALU F/F is turned ON at TSG 10 instead of TSG 11 when operating on double scale.

e.2. In the R–975/FSG–1 and 1032 receivers, since the digit ONE in the 11th place of the H coordinate word was not transmitted, it is replaced at the receiver as a ONE set into the serial adder at TS 19 (par. 148*c*) and, therefore, into DLU 10 at TS 21.

Page 180, paragraph 179*d*, line 1. Before "At the end." Add: In the R–930/TSQ–36 receiver only, .

Page 181. Delete figure 120 and substitute the new figure 120.

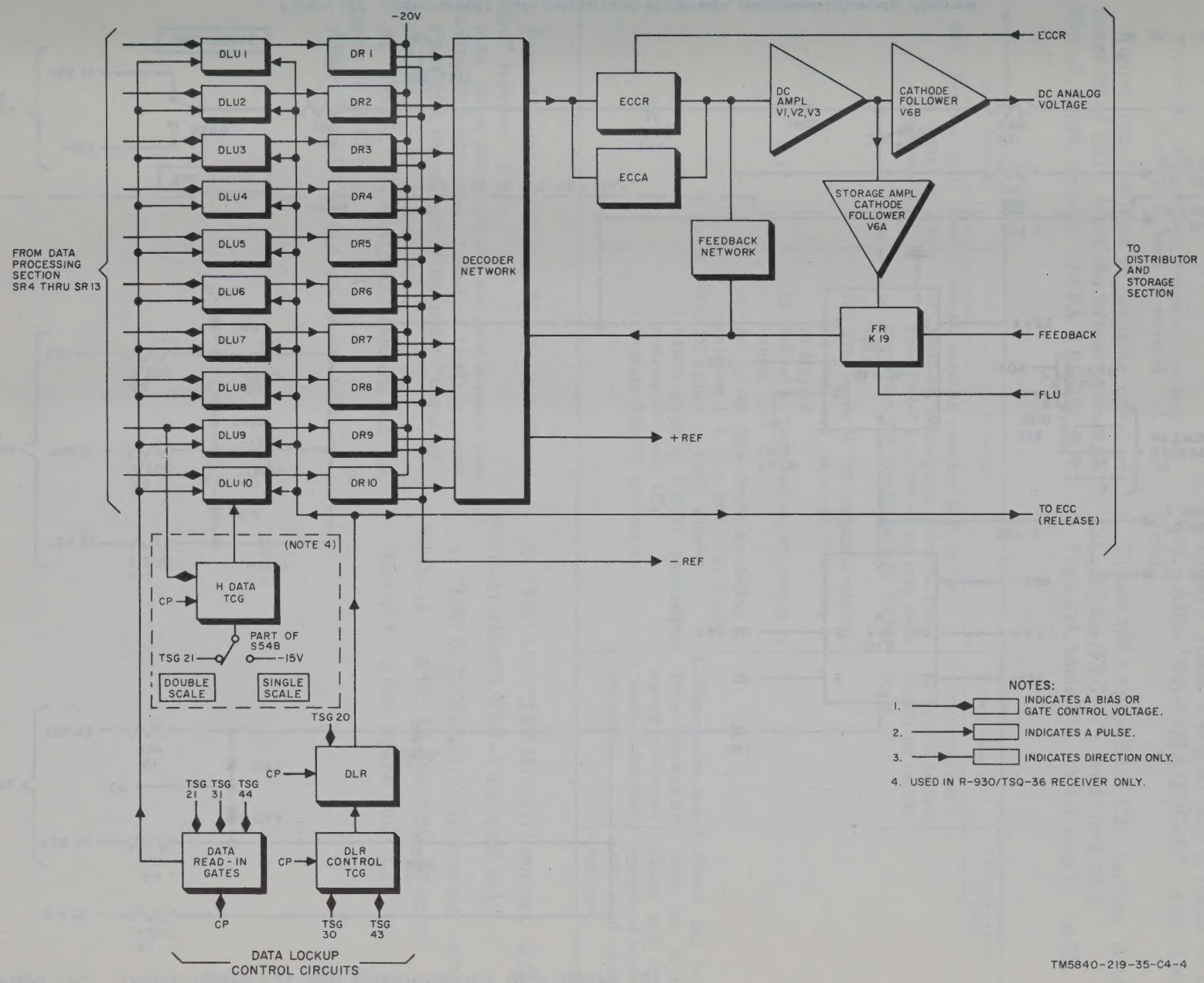

Figure 120. (Superseded) *Decoding network and amplifier section, block diagram.*

12 *Page 182.* Delete figure 121 and substitute the new figure 121.

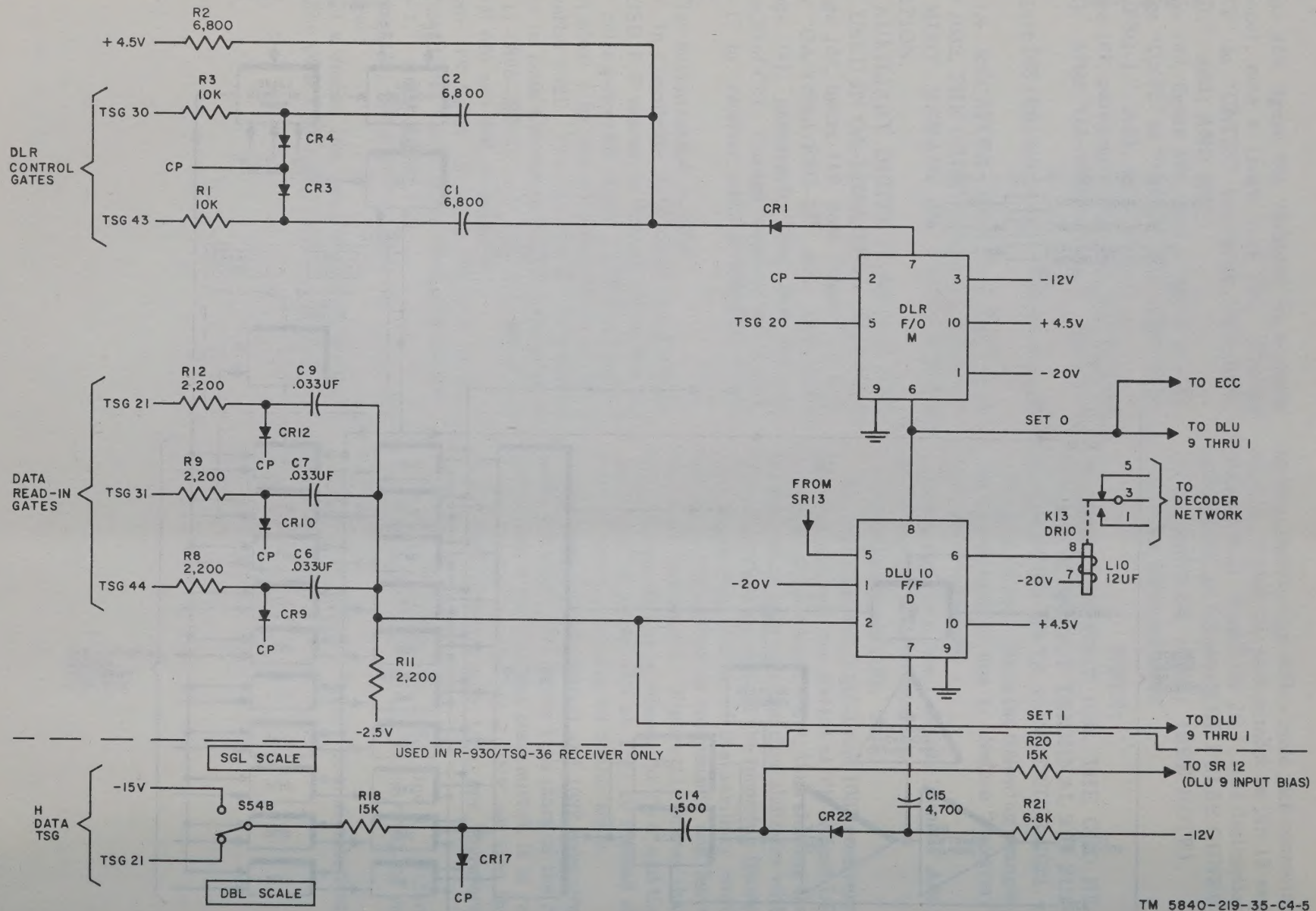

Figure 121. (Superseded) *Data lockup control circuits, simplified schematic diagram.*

AGO 5655A

Page 183, paragraph 182. Change the heading to: H Digit 10 Gate (R–930/TSQ–36 Only).

Page 184, figure 122, caption. After "gate." Add: (*R–930/TSQ–36 only*).

Figure 131. (Superseded) *Receiver, block diagram.*
(Located in back of manual)

Figure 132 (fold-out in separate envelope) (page 20 of C2). Make the following changes: Top of figure, change "DATA PROCESSING AN/TSQ–36 AND OA–1425A/FSG–1" to: DATA PROCESSING AN/TSQ–36, OA–1425A/FSG–1, AND 1030.

Notes 1 (page 1 of C2) and 2 (page 20 of C2). After "OA–1425A/FSG–1." Add: AND 1030.

Figure 132.1 (page 20 of C2), caption. After "OA–1425A/FSG–1." Add: *and 1032.*

Page 216, table VII. After step 23. Add:

Step	Function	Procedure	Normal indication	Probable location or fault
23.1	Remote AGC level set signal in 1033 transmitter unit.	*a.* Set all parallax switches at 0 (down). (1) Connect oscilloscope between terminals TB1–5 and TB1–6 on 1021 Data Converter TM 11–5895–287–35 (WSM 024). (2) Sync scope at TP1 on 1033 Transmitter Unit and set scope time base to 20 MS/CM. (3) Set sel at TS53 and set PC switch to NORM (up). (4) Set in test Data frame by placing P_x switches 1, 4, 5, 6, and 11 at 1 (up). *b.* Place PC switch to TEST (down). (1) Synch scope at RECYC pushbutton common terminal (C). (2) Depress RECYC pushbutton.	*a.* Approximately three data frames appear on oscilloscope. *b.* Observe test data frame followed by steady 1,500-cycle remote AGC level set signal.	*b.* Check RC F/F (step 10), check CR200 and components of remote AGC level set signal gate.

Page 236, table VII, step 35. In the "Function" column. Add:

Note. When performing this test on Coordinate Data Receiver Unit 1032, connect J16B–9 (or J2–15) to ground.

Page 250, paragraph 200*b*, under "Receiver." Make the following changes:

At "TSG O," "TERMINAL" column, last line (page 30 of C2).

After "R–975/FSG–1." Add: *and 1032.*

At "TSG 19," "TERMINAL" column. Add: S54B–11 (R–975/FSG–1 and 1032 only).

At "TSG 21," "TERMINAL" column. After "S54B–11." Add: (R–930/TSQ–36 only).

Page 283. After figure 140. Add:

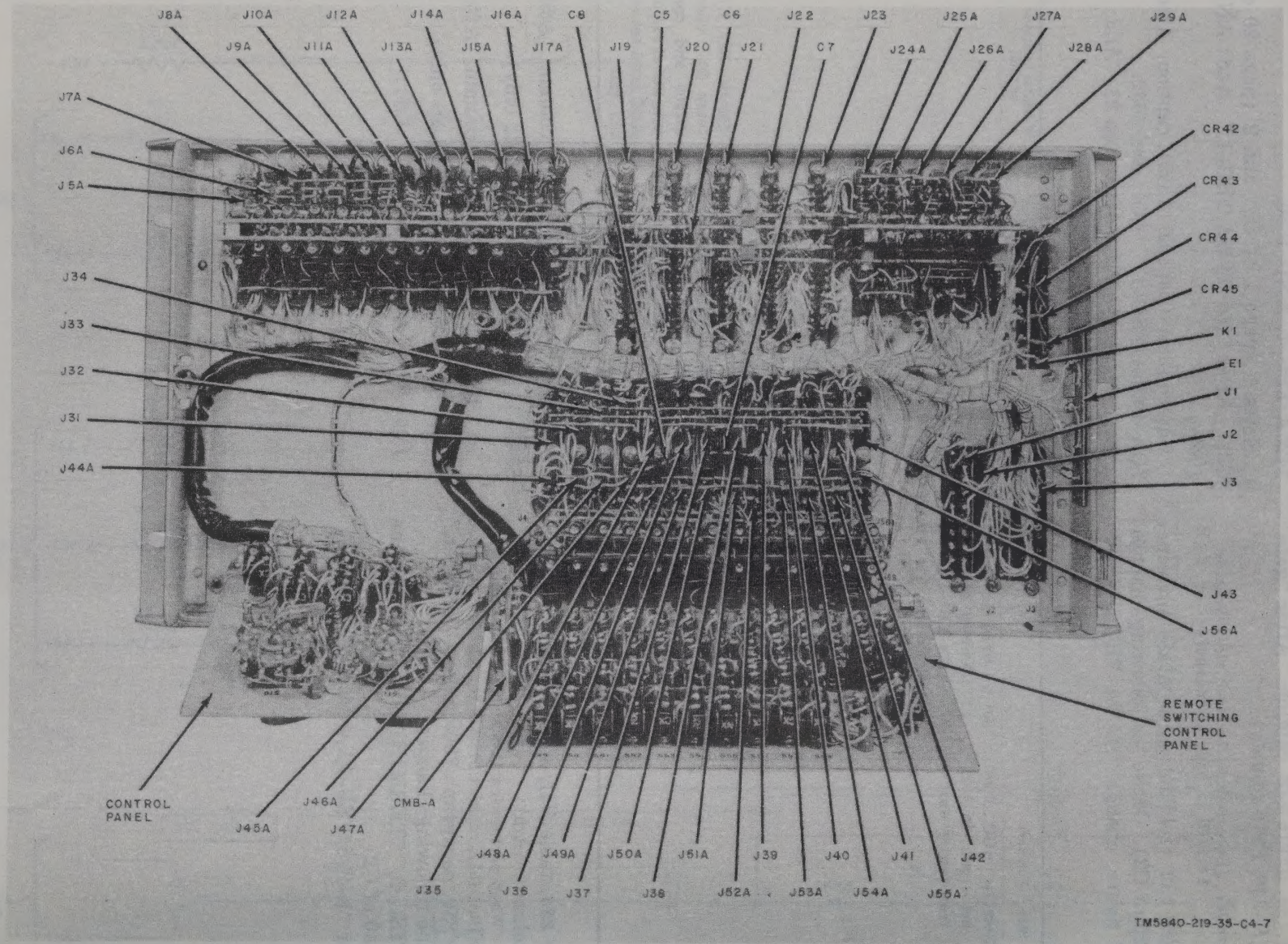

Figure 140.1. (Added) *Coordinate Data Transmitter Unit 1033, parts location.*

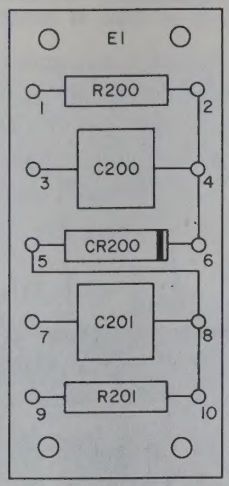

Figure 140.2. (Added) *Component board E1 in Coordinate Data Transmitter Unit 1033.*

Page 284, figure 141 (page 21 of C2). Make the following changes:

Caption. After "AM–2450/FSG–1." Add: *and 1034.*

Part 2 of 4, identification number TM 5840–219–35–123 ②. Delete part 2 and substitute the new part 2 of 4.

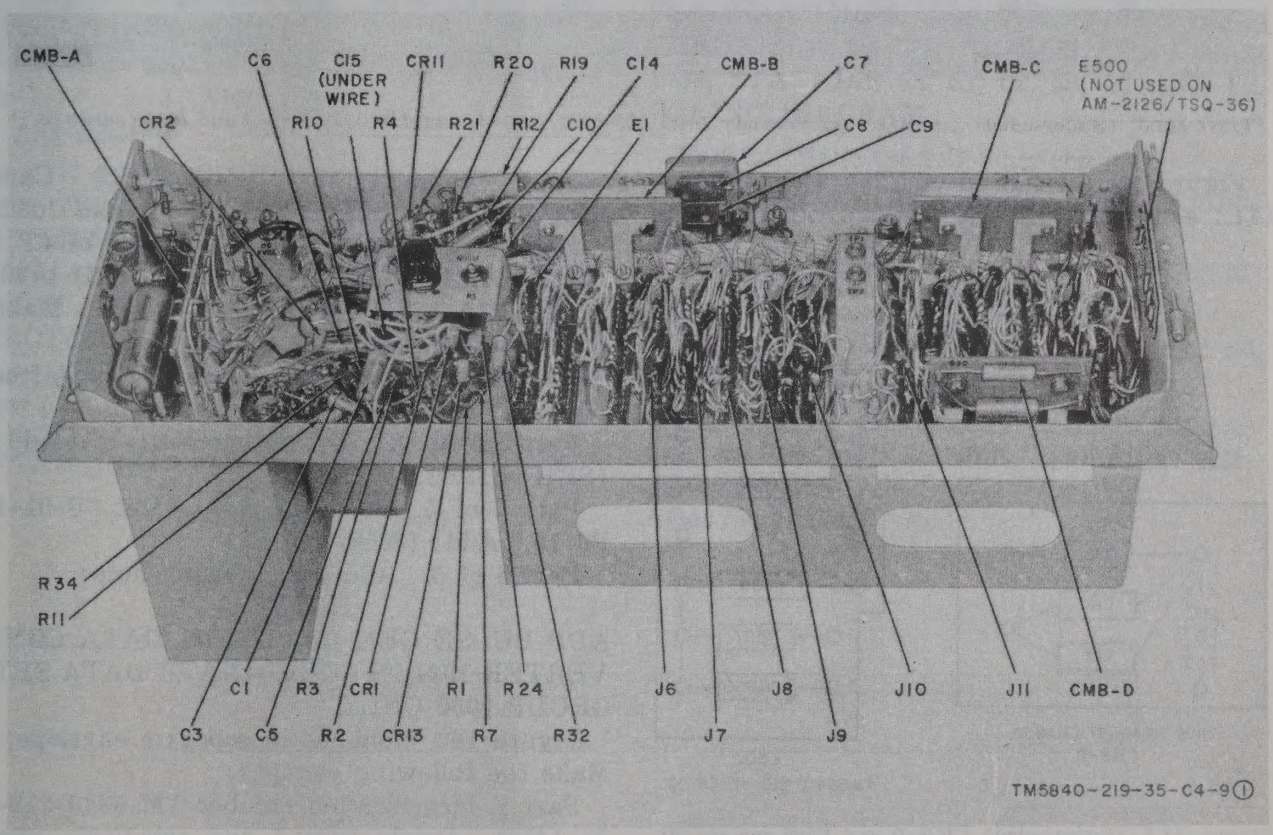

Figure 141.2. (Superseded) *Amplifier-synchronizer units AM–2126/TSQ–36 and AM–2450/FSG–1 and 1034 (part 2 of 4).*

Page 285, figure 141 (part 3 of 4), identification number TM 5840–219–35–123③. Delete part 3 and substitute the new part 3 of 4.

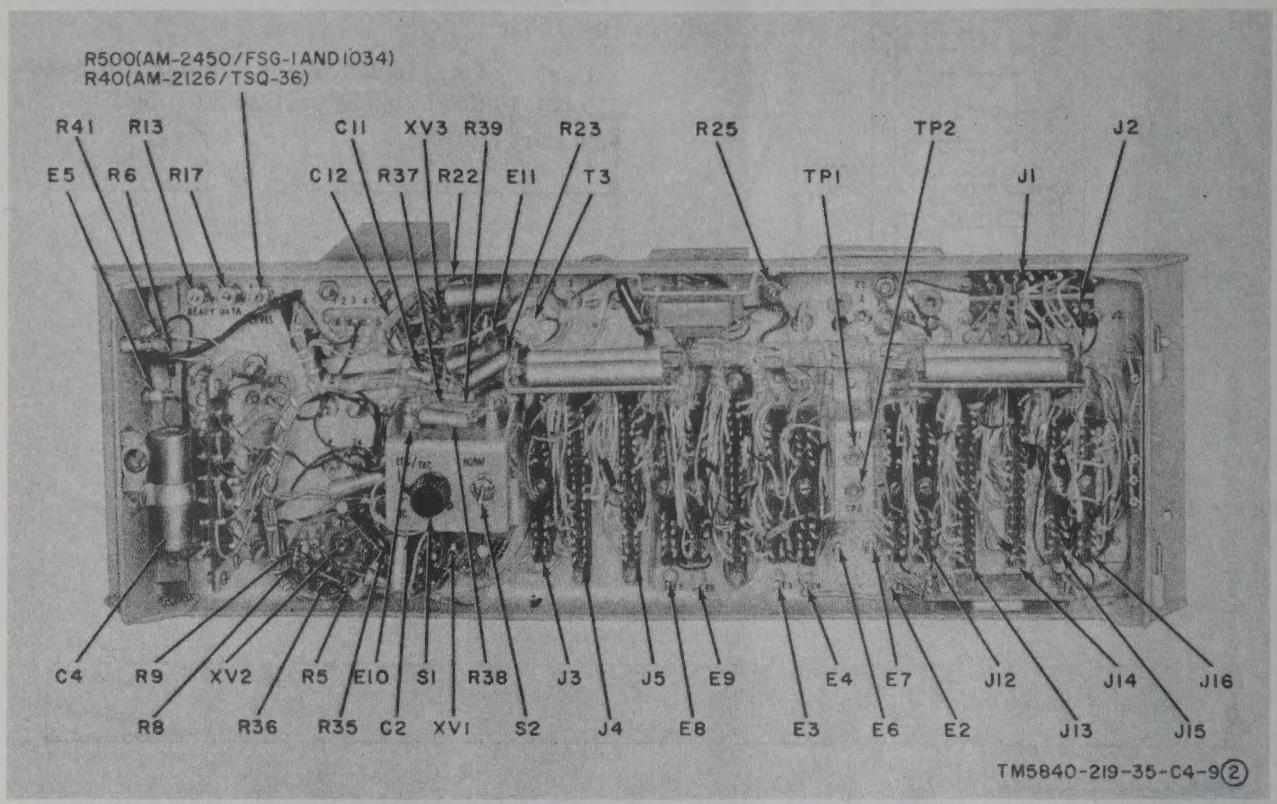

Figure 141.3. (Superseded) *Amplifier-synchronizer units AM–2126/TSQ–36 and AM–2450/FSG–1 and 1034 (part 3 of 4).*

Figure 141.1 (page 21 of C2). Delete figure 141.1 and substitute the new figure 141.1:

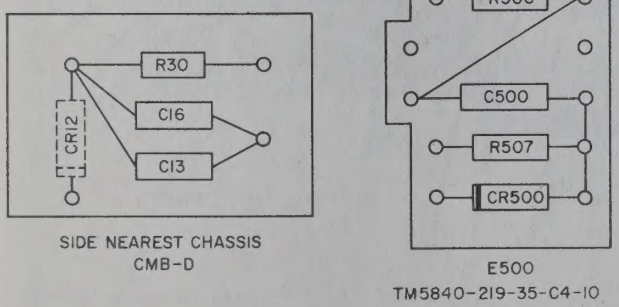

Figure 141.1. (Superseded) *CMB–D and E500 component boards in amplifier-synchronizer units AM–2450/FSG–1 and 1034.*

Page 286, figure 142 (page 19 of C3). Caption. After "R–975/FSG–1." Add: *and 1032.*

Page 315, figure 158, note (page 2 of C2). After "OA–1425A/FSG–1." Add: AND 1030.

Page 328, figure 162.1, fold-out in C2. Make the following changes:

Caption. Change "set" to "sets" and after "OA–1425A/FSG–1." Add: *and 1030.*

Part 2 of 5. At P6–15 after "S 01–1." Add: (SEE NOTE).

Part 4 of 5. At P/J18A–34 after "S 01–1 P6–15." Add: (SEE NOTE).

Part 5 of 5. Add the following note:

NOTE:

ADP PULSE GEN RET FROM DATA CONVERTER 1021 IN COORDINATE DATA SET GROUP 1030 ONLY.

Figure 163 (fold-out in separate envelope). Make the following changes:

Part 1, identification number TM 5840–219–35–145①. Delete part 1 and substitute new part 1.

Figure 163.1. (Superseded) *Coordinate data transmitter unit T–721/TSQ–36, schematic diagram (part 1 of 3).*
(Located in back of manual)

Part 2, identification number TM 5840–219–35–145②. Add a dashed output line from terminal 6 of RC F/F (at the extreme left side of figure) that extends up and over the block to the left side of the illustration. Add the following destination information: TO SH1 R200 (NOTE 16).

Part 3, identification number TM 5840–219–35–145③. Add a dashed input line from the left side of the illustration to SR1 terminal 7. Add input information as follows:
FROM SH1 CR201 (NOTE 16).

Page 331, figure 170 (fold-out in separate envelope). Make the following changes:

Change the caption to: *Amplifier-synchronizer units AM–2126/TSQ–36, AM–2450/FSG–1, and 1034, schematic diagram (part 1 of 2).*

Part 1. At R17 (page 27 of C3), change "(NOTE 15)" to: (NOTE 18).

Change the designation of the note added by C3 to: 18.

Note 15 (page 21 of C2). After "AM–2450/FSG–1." Add: AND 1034.

Note 16 (page 21 of C2). After "AM–2450/FSG–1." Add: AND 1034.

Add note 19.

19. IN AMPLIFIER SYNCHRONIZER AM–2126/TSQ–36, THE DOUBLE SCALE HEIGHT CIRCUITRY (CR500, C500, R506, R507, AND TERMINAL 7 OF F/F 5) IS NOT USED AND TERMINAL 2 OF F/O 5 IS CONNECTED DIRECTLY TO TERMINAL 17 OF J14. Part 2. Delete part 2 and substitute the new part 2 of 2.

Figure 170.2. Amplifier-synchronizer units AM–2126/TSQ–36, AM–2450/FSG–1, and 1034, schematic diagram (part 2 of 2).
(Located in back of manual)

Figure 170.1 (page 25 of C2), make the following changes:

Change the values of R37 and R38 from "487" to: 316.

Change the value of R39 from "121" to: 422.

In the caption, change *"unit"* to *"units"* and after *"AM–2450/FSG–1."* Add: *and 1034.*

Figure 171 (fold-out in separate envelope). Make the following changes:

Change the caption to: *Amplifier-synchronizer units AM–2126/TSQ–36, AM–2450/FSG–1, and 1034, wiring diagram (part 1 of 4).*

Part 1 (page 21 of C2). Make the following changes:

Note 1, two places. After "AM–2450/FSG–1," add "AND 1034" and change "UNIT" to: UNITS.

Note 2. After "AM–2450/FSG–1." Add: AND 1034.

Add note 3.

3. STATIONS 56, 61, 62, 65, AND 66 ARE FOR AM–2126/TSQ–36 ONLY! FOR STATIONS 56, 61, 62, 65 AND 66 OF AM–2450/FSG–1 AND 1034, SEE AMPLIFIER SYNCHRONIZER UNITS AM–2450/FSG–1 AND 1034, STATIONS 56, 61, 62, 65, 66 AND 69, WIRING DIAGRAM.

Part 2. Make the following changes:

At station 27, at wire, "66 BLU." Add: (AM–2126/TSQ–36 ONLY).

At station 28, at wire, "65 WHT–GRN." Add: (AM–2126/TSQ–36 ONLY).

Part 4. At stations 56, 61, 62, 65, and 66, add: (NOTE 3).

Figure 171.1 (fold-out in C2). In the caption, change "unit" to "units" and after "AM–2450/FSG–1." Add: *and 1034.*
After figure 171.1. Add:

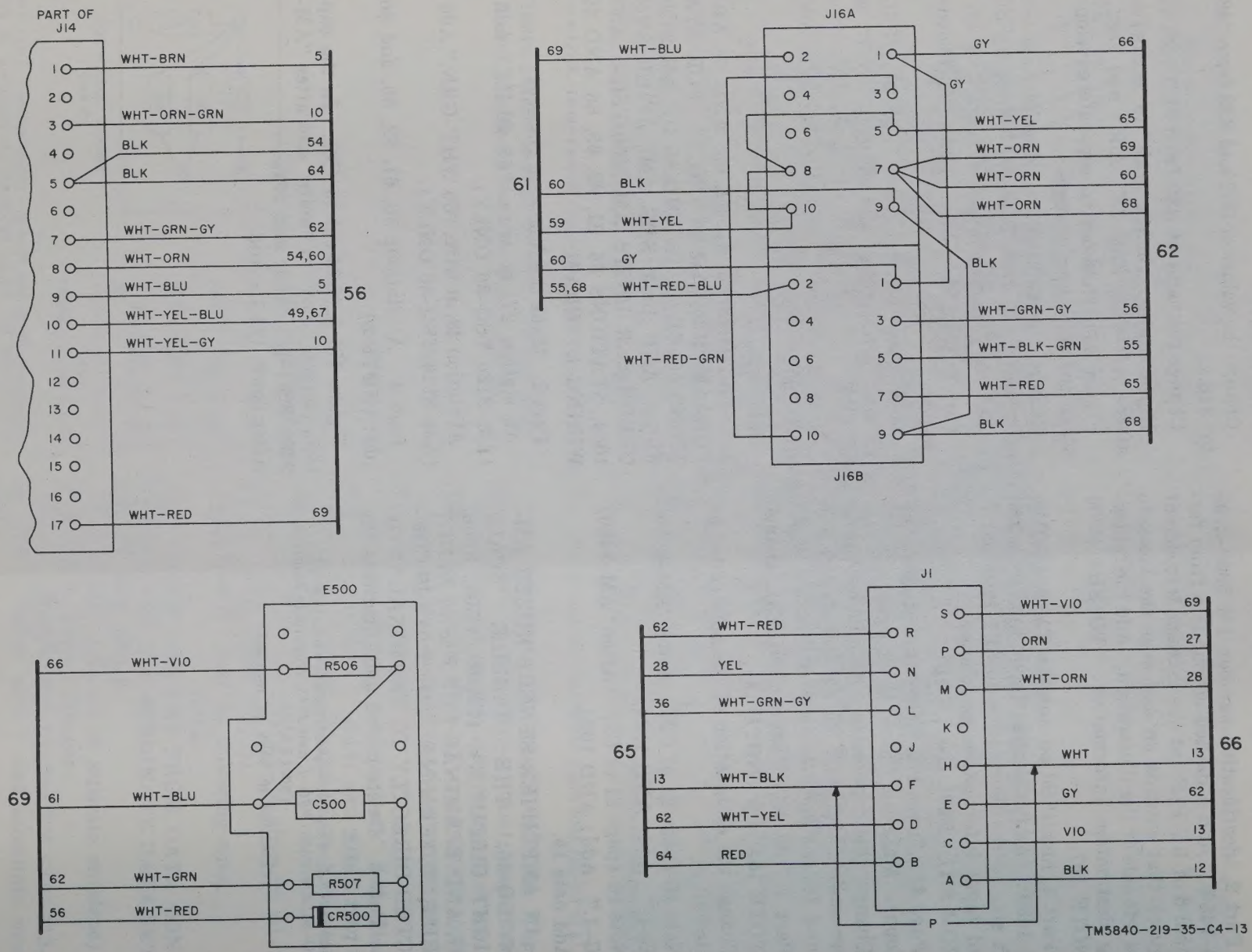

Figure 171.2. (Added) *Amplifier-synchronizer units AM–2450/FSG–1 and 1034, stations 56, 61, 62, 65, 66, and 69 wiring diagram.*

NOTES:

.SES CONSIST OF TWO CYCLES
E.

) 12 ARE NOT USED IN
30.

THE REMOTE AGC LEVEL SET SIGNAL
ONE PRESENT BETWEEN ALL DATA FRAMES.
NAL IS NOT USED IN THE AN/TSQ-36 DATA SET.

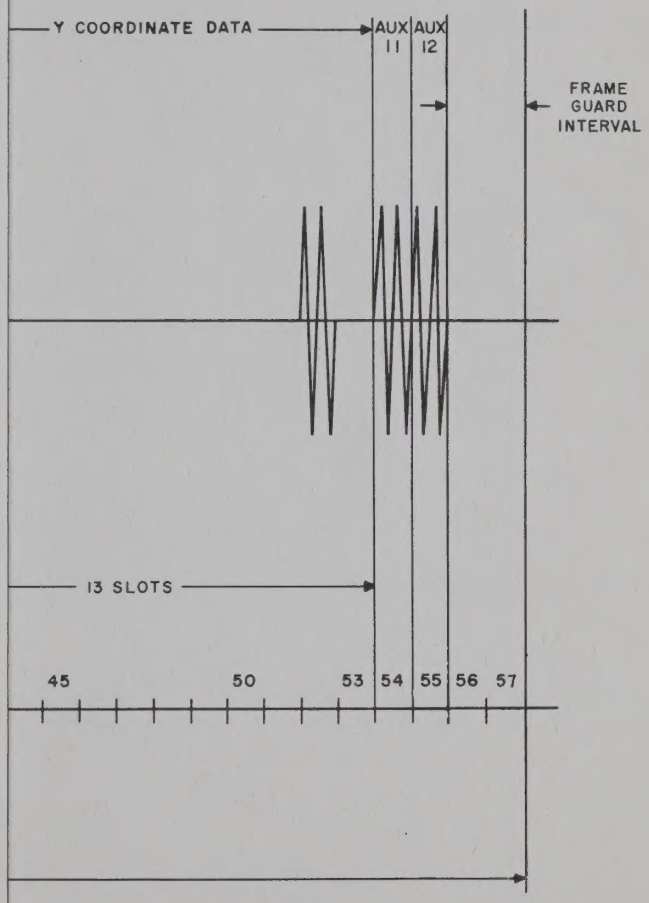

TM 5840-219-35-C4-1

Figure 2.

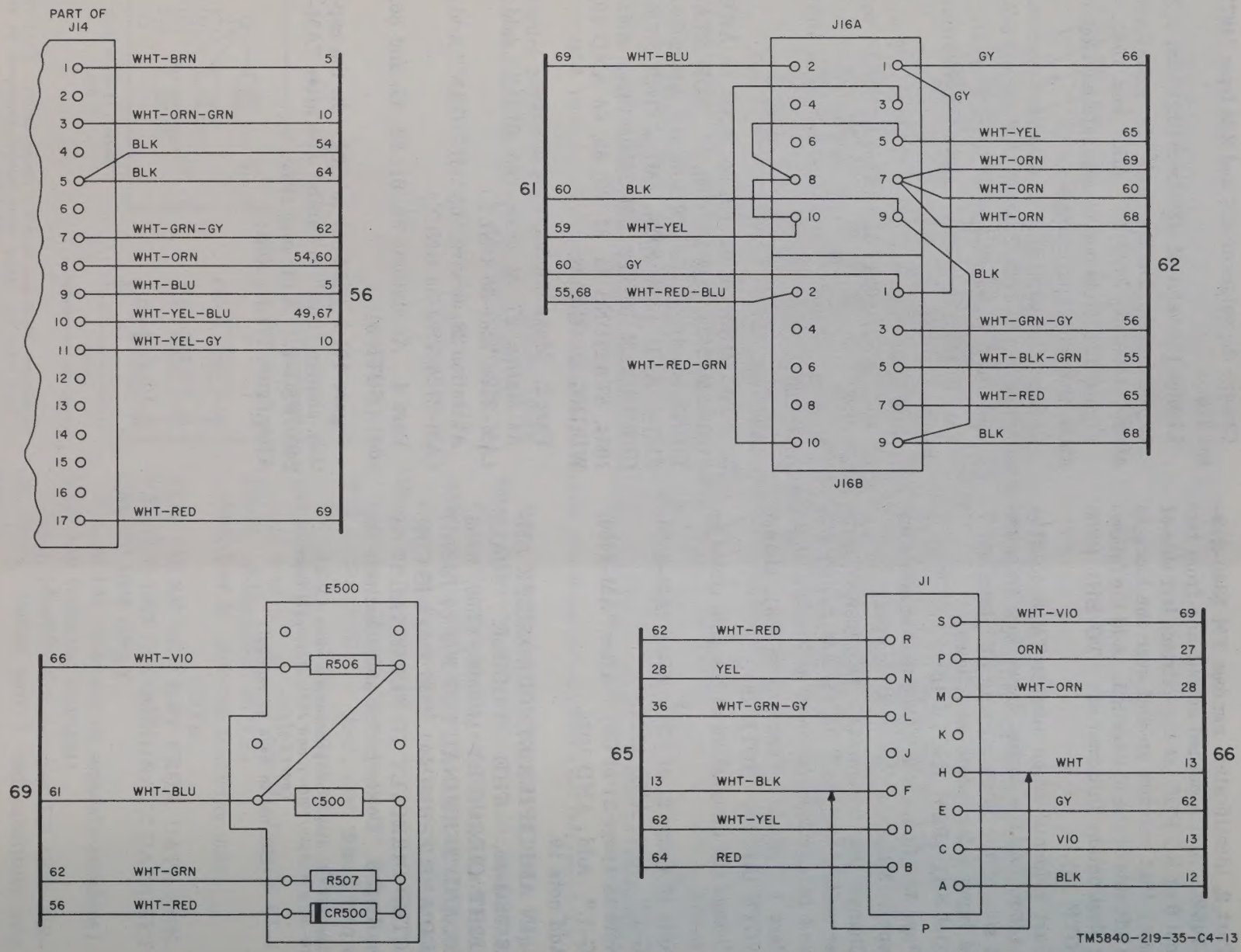

Figure 171.2. (Added) *Amplifier-synchronizer units AM–2450/FSG–1 and 1034, stations 56, 61, 62, 65, 66, and 69 wiring diagram.*

NOTES:

1. SYNC AND DATA PULSES CONSIST OF TWO CYCLES OF A 1,500-CPS TONE.
2. AUXILIARY DIGITS 11 AND 12 ARE NOT USED IN OA-1425A/FSG-1 AND 1030.
3. IN THE 1030 DATA SET, THE REMOTE AGC LEVEL SET SIGNAL IS A STEADY 1,500 CPS TONE PRESENT BETWEEN ALL DATA FRAMES. THE AGC LEVEL SET SIGNAL IS NOT USED IN THE AN/TSQ-36 DATA SET.

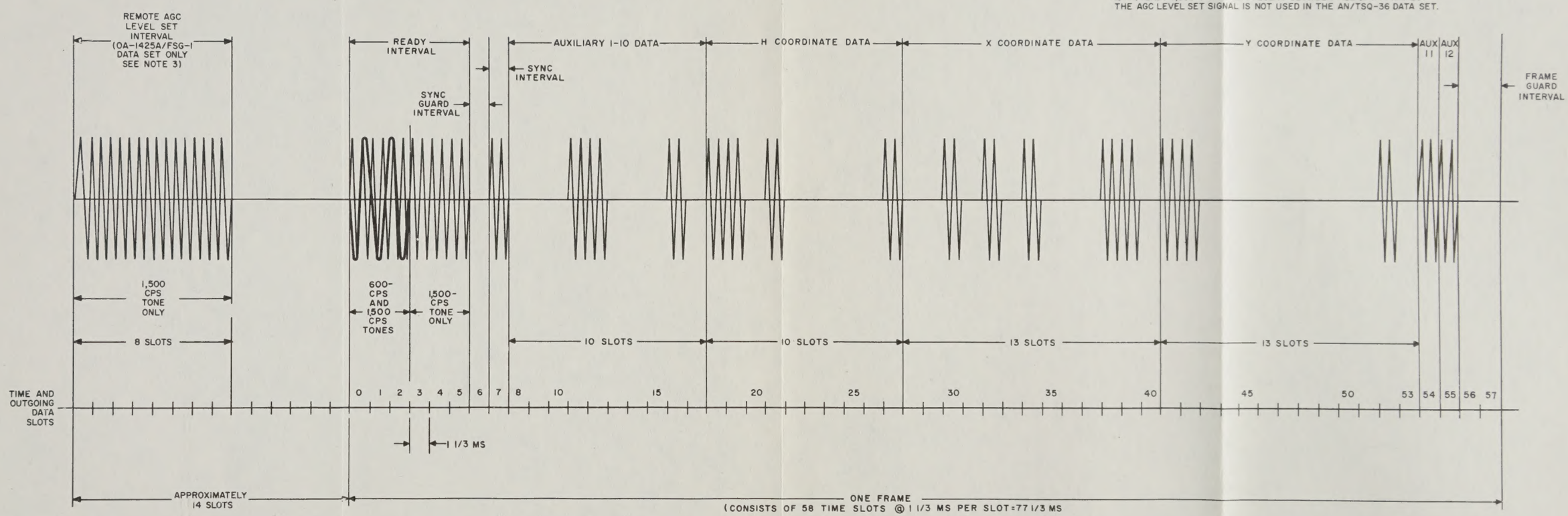
REMOTE AGC LEVEL SET INTERVAL (OA-1425A/FSG-1 DATA SET ONLY SEE NOTE 3)
READY INTERVAL
SYNC GUARD INTERVAL
SYNC INTERVAL
AUXILIARY 1-10 DATA
H COORDINATE DATA
X COORDINATE DATA
Y COORDINATE DATA
AUX 11
AUX 12
FRAME GUARD INTERVAL
1,500 CPS TONE ONLY
600-CPS AND 1,500 CPS TONES
1,500-CPS TONE ONLY
8 SLOTS
10 SLOTS
10 SLOTS
13 SLOTS
13 SLOTS
TIME AND OUTGOING DATA SLOTS
0 1 2 3 4 5 6 7 8 10 15 20 25 30 35 40 45 50 53 54 55 56 57
1 1/3 MS
APPROXIMATELY 14 SLOTS
ONE FRAME
(CONSISTS OF 58 TIME SLOTS @ 1 1/3 MS PER SLOT=77 1/3 MS

Figure 2. (Superseded) *Typical cycle of transmitted message.*

TM 5840-219-35-C4-1

Figure 2.

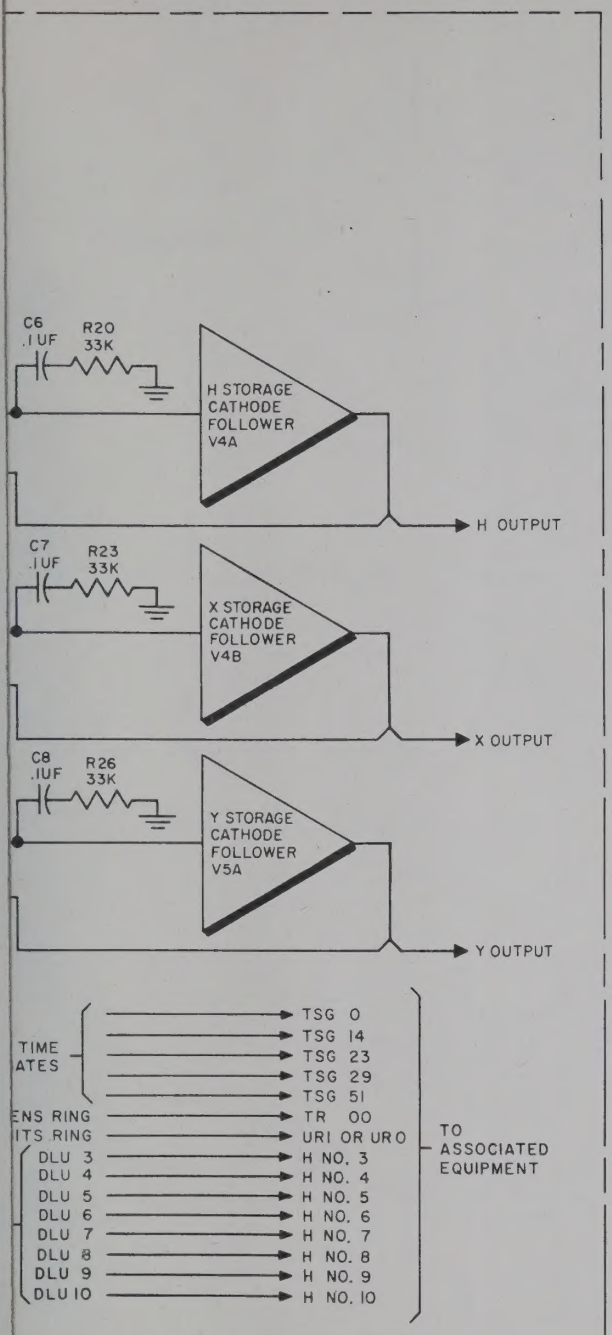

DISTRIBUTOR AND STORAGE SECTION

ABBREVIATIONS:

ADC	- ALL DATA CONTROL LEAD
AGC	- AUTOMATIC GAIN CONTROL
ALU	- AUXILIARY (AUX) LOCKUP
ALR	- AUX LOCKUP RELEASE
AR	- AUX RELAY
BC	- BINARY COUNTER
CCS	- CLEAR CARRY STORAGE
CG	- COMBINATION GATE
CP	- CLOCK PULSE
DLU	- DATA LOCKUP
DLR	- DATA LOCKUP RELEASE
DR	- DATA RELAY
DSA	- DATA STORAGE AMPLIFIER
DSR	- DATA STORAGE RELAY
ECC	- EARTH CURVATURE CORRECTION
ECCA	- EARTH CURVATURE CORRECTION ADJUST
ECCLU	- EARTH CURVATURE CORRECTION LOCKUP
ECR	- EARTH CURVATURE RELAY
F/F	- BISTABLE CIRCUIT
F/O	- MONOSTABLE CIRCUIT
FSC	- FRAME START CONTROL
FLU	- FEEDBACK LOCKUP
FR	- FEEDBACK RELAY
HF	- H COORDINATE FEEDBACK
HG	- H COORDINATE GRID
PSR	- PARALLAX STORAGE REGISTER
RFB	- FEEDBACK RESISTANCE
RLU	- REFERENCE LOCKUP
RPD	- REFERENCE PROTECTION DELAY
RPLU	- REFERENCE SHORT CIRCUIT PROTECTION LOCKUP
RPR	- REFERENCE SHORT CIRCUIT RELAY
RS	- REMOTE START
R_S	- SERIES RESISTANCE
SLU	- STORAGE LOCKUP
SLR	- STORAGE LOCKUP RELEASE
SP	- SAMPLING PULSE
SPC	- SHIFT PULSE CONTROL
SR	- SHIFT REGISTER
TCG	- TIME CONTROL GATE
TR	- TENS RING
TRR	- TENS RING RESET
TSG	- TIME SLOT GATE
UR	- UNITS RING
URR	- UNITS RING RESET
XF	- X COORDINATE FEEDBACK
XG	- X COORDINATE GRID
YF	- Y COORDINATE FEEDBACK
YG	- Y COORDINATE GRID

NOTES:

1. INDICATES A BIAS OR GATE CONTROL VOLTAGE.
2. INDICATES A PULSE.
3. INDICATES DIRECTION ONLY.
4. DIAGONAL CONNECTION INDICATES DIRECTION OF FLOW.
5. ALL TIME SLOT GATE VOLTAGES ARE POSITIVE.
6. IN AMPLIFIER SYNCHRONIZER UNIT AM-2450/FSG-1 AND 1034, OC-CDG/TAG SWITCH S1 MUST REMAIN IN THE CDG/TAC POSITION.
7. IN RECEIVER UNIT R-975/FSG-1 AND 1032, THE GROUND-SLANT SWITCHES MUST REMAIN IN THE GROUND POSITION.
8. AUXILIARY DIGITS 11 AND 12 ARE NOT USED IN OA-1425A/FSG-1 AND 1030.
9. USED IN RECEIVER UNIT R-930/TSQ-36 ONLY.
10. USED IN RECEIVER UNITS R-975/FSG-1 AND 1032 ONLY.

TM5840-219-35-C4-6

Figure 131.

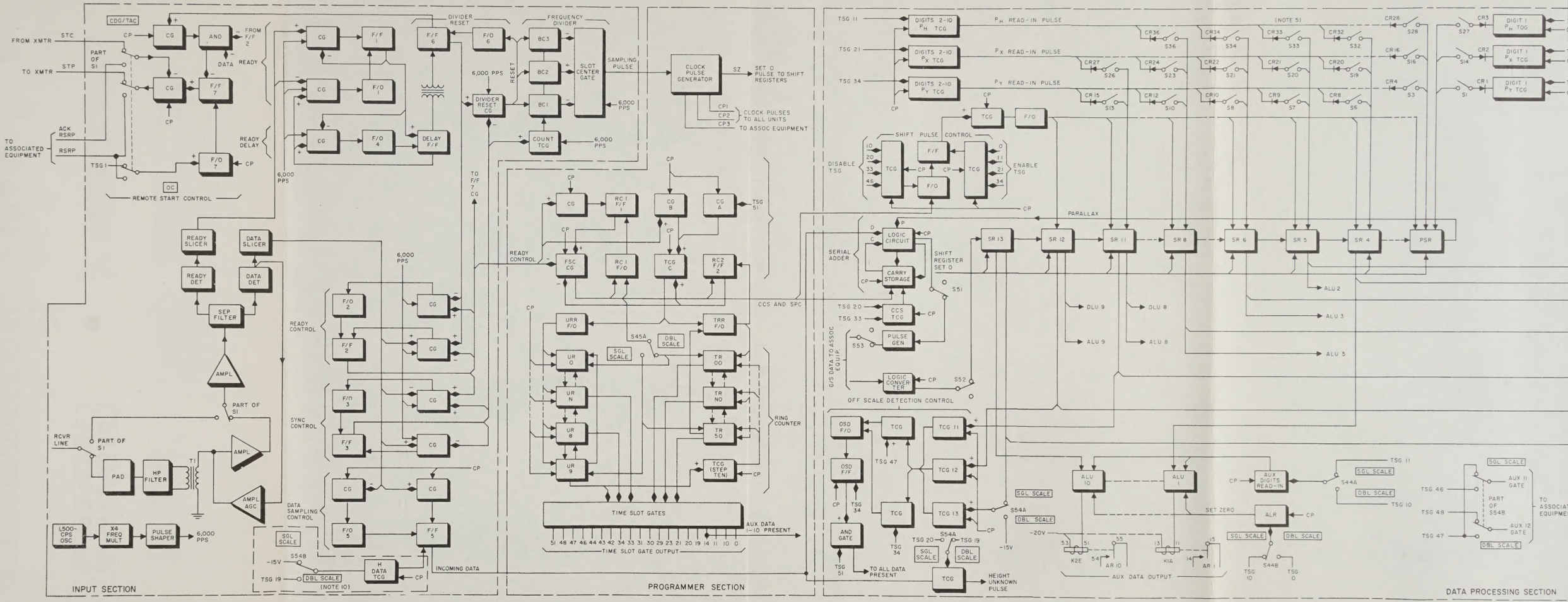

Figure 131. **(Superseded)** *Receiver, block diagram.*

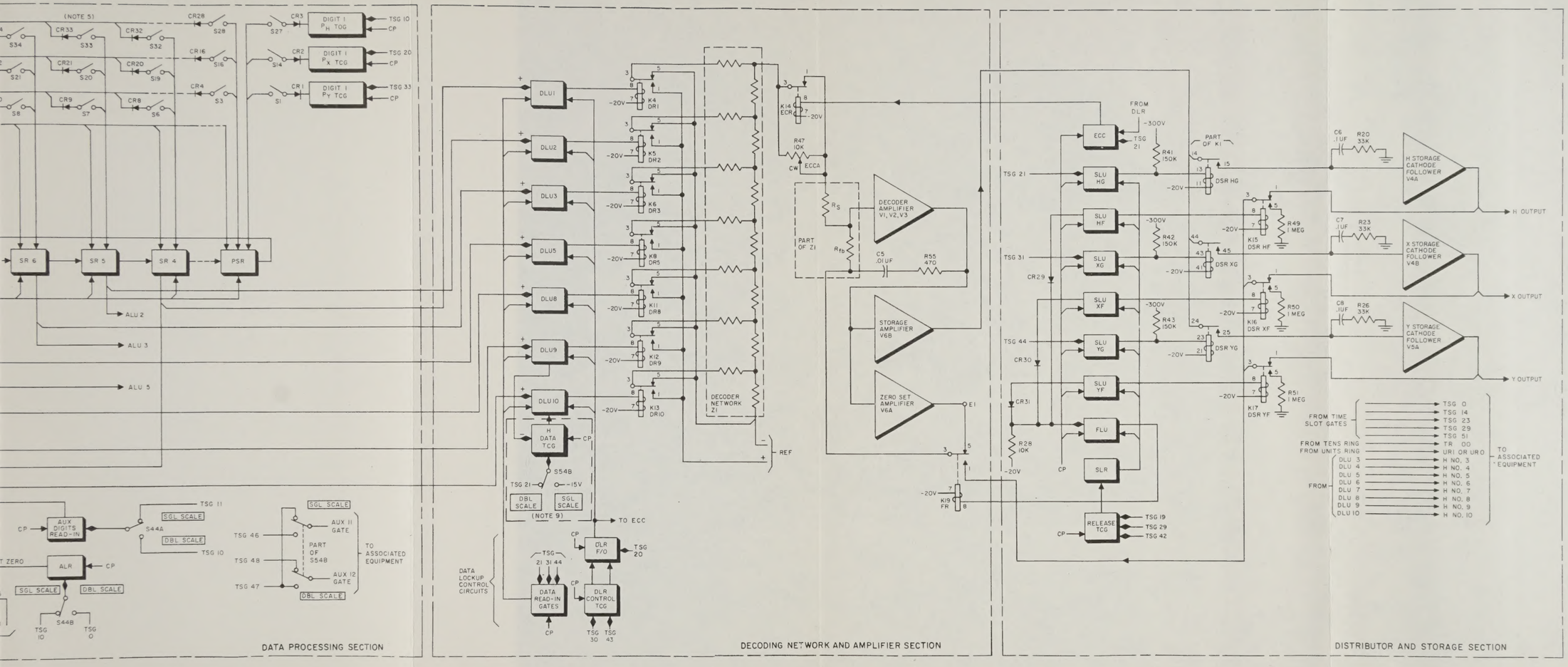

Figure 131. (Superseded) *Receiver, block diagram.*

ABBREVIATIONS:

ADC	- ALL DATA CONTROL LEAD
AGC	- AUTOMATIC GAIN CONTROL
ALU	- AUXILIARY (AUX) LOCKUP
ALR	- AUX LOCKUP RELEASE
AR	- AUX RELAY
BC	- BINARY COUNTER
CCS	- CLEAR CARRY STORAGE
CG	- COMBINATION GATE
CP	- CLOCK PULSE
DLU	- DATA LOCKUP
DLR	- DATA LOCKUP RELEASE
DR	- DATA RELAY
DSA	- DATA STORAGE AMPLIFIER
DSR	- DATA STORAGE RELAY
ECC	- EARTH CURVATURE CORRECTION
ECCA	- EARTH CURVATURE CORRECTION ADJUST
ECCLU	- EARTH CURVATURE CORRECTION LOCKUP
ECR	- EARTH CURVATURE RELAY
F/F	- BISTABLE CIRCUIT
F/O	- MONOSTABLE CIRCUIT
FSC	- FRAME START CONTROL
FLU	- FEEDBACK LOCKUP
FR	- FEEDBACK RELAY
HF	- H COORDINATE FEEDBACK
HG	- H COORDINATE GRID
PSR	- PARALLAX STORAGE REGISTER
RFB	- FEEDBACK RESISTANCE
RLU	- REFERENCE LOCKUP
RPD	- REFERENCE PROTECTION DELAY
RPLU	- REFERENCE SHORT CIRCUIT PROTECTION LOCKUP
RPR	- REFERENCE SHORT CIRCUIT RELAY
RS	- REMOTE START
R_S	- SERIES RESISTANCE
SLU	- STORAGE LOCKUP
SLR	- STORAGE LOCKUP RELEASE
SP	- SAMPLING PULSE
SPC	- SHIFT PULSE CONTROL
SR	- SHIFT REGISTER
TCG	- TIME CONTROL GATE
TR	- TENS RING
TRR	- TENS RING RESET
TSG	- TIME SLOT GATE
UR	- UNITS RING
URR	- UNITS RING RESET
XF	- X COORDINATE FEEDBACK
XG	- X COORDINATE GRID
YF	- Y COORDINATE FEEDBACK
YG	- Y COORDINATE GRID

NOTES:

1. INDICATES A BIAS OR GATE CONTROL VOLTAGE.
2. INDICATES A PULSE.
3. INDICATES DIRECTION ONLY.
4. DIAGONAL CONNECTION INDICATES DIRECTION OF FLOW.
5. ALL TIME SLOT GATE VOLTAGES ARE POSITIVE.
6. IN AMPLIFIER SYNCHRONIZER UNIT AM-2450/FSC-1 AND 1034, OC-CDG/TAG SWITCH S1 MUST REMAIN IN THE CDG/TAC POSITION.
7. IN RECEIVER UNIT R-975/FSC-1 AND 1032, THE GROUND-SLANT SWITCHES MUST REMAIN IN THE GROUND POSITION.
8. AUXILIARY DIGITS 11 AND 12 ARE NOT USED IN OA-1425A/FSC-1 AND 1030.
9. USED IN RECEIVER UNIT R-930/TSQ-36 ONLY.
10. USED IN RECEIVER UNITS R-975/FSC-1 AND 1032 ONLY.

TM5840-219-35-C4-6

Figure 131.

NOTES:

1. UNLESS OTHERWISE INDICATED, RESISTANCES ARE IN OHMS, CAPACITANCES ARE IN UUF.
2. UNLESS OTHERWISE INDICATED, RESISTORS ARE ±5% TOLERANCE.
3. TERMINAL NUMBERING FOR SWITCHES S10, S11, S60A, AND S60B IS FOR REFERENCE ONLY. RELATIVE LOCATION OF TERMINALS IS SHOWN IN DIAGRAM BELOW.

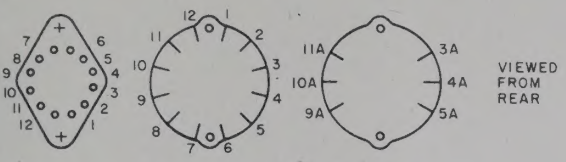

4. ENCLOSURES DESIGNATED A, B, T/J, T/K ETC REPRESENT PLUG-IN UNITS. THE J NUMBER ASSOCIATED WITH P1 IN THE ENCLOSURES IS THE DESIGNATION OF THE MATING PANEL CONNECTOR. THE NUMBERS ASSOCIATED WITH LEADS ENTERING THE ENCLOSURE ARE THE PLUG AND CONNECTOR TERMINALS.
5. NONFUNCTIONAL PLUG-IN UNITS MAY APPEAR IN SEVERAL ENCLOSURES FOR CIRCUIT LAYOUT CONVENIENCE. TERMINALS ARE REPEATED IN THESE ENCLOSURES WHERE NECESSARY TO FACILITATE CIRCUIT READABILITY.
6. THE FUNCTIONAL DESIGNATIONS ASSOCIATED WITH THE LAMP CONNECTIONS AT THE UNIT RING. TENS RING, BINARY COUNTER, AND SHIFT REGISTER STAGES INDICATE STAGE NUMBERS OF THE [UNITS RING], [TENS RING], [BINARY COUNTER], AND [SHIFT REGISTER] RESPECTIVELY.
7. FUNCTIONAL PACKAGE DESIGNATIONS ARE EXPLAINED IN TABLE A.
8. [ ] INDICATES EQUIPMENT MARKING.
9. DIODE PER SM-B-181088.
10. DIODE PER SM-B-181094.
11. DIODE PER SM-B-181092.
12. TRANSISTOR PER SM-B-182553.
13. IN OA-1425A/FSG-1 AND 1030 OC-CDG/TAC SWITCH S60 MUST REMAIN IN THE CDG/TAC POSITION.
14. AUXILIARY DIGITS 11 AND 12 ARE NOT USED IN OA-1425A/FSG-1 AND 1030
15. PLUG P18 IS DESIGNATED P1 IN ALL AN/MSQ-18 SYSTEM MANUALS
16. USED IN 1033 TRANSMITTER GROUP ONLY.

ABBREVIATION	FUNCTIONAL DESIGNATION
ACK	ACKNOWLEDGE
BC 1-13	BINARY COUNTERS
CLR	COORDINATE RELAY LOCKUP RELEASE
CO	CONTINUOUS
CP1 AND 2	CLOCK PULSE GENERATOR
ECR	EARTH CURVATURE CORRECTION RELAY
ERP	ENCODER RESET PULSE
ESP	ENCODER START PULSE
HR	H COORDINATE RELAY
PC	PULSE CONTROL
PFD	PULSE FREQUENCY DIVIDER
PH	H COORDINATE PARALLAX
PX	X COORDINATE PARALLAX
PY	Y COORDINATE PARALLAX
RS	REMOTE START
RT	PROGRAMMER RESET CONTROL
RTC	READY TONE CONTROL
SP	SINGLE PULSE GENERATOR
SR 1-13	SHIFT REGISTER
SRC	SHIFT REGISTER CONTROL
SZ	SHIFT REGISTER SET ZERO PULSE
TC	RECYCLE TEST CONTROL
TR 00-50	TENS RING
TRR	TENS RING RESET PULSE GENERATOR
UR 0-9	UNITS RING
URR	UNITS RING RESET PULSE GENERATOR
XR	X COORDINATE RELAY
YR	Y COORDINATE RELAY
LU	LOCKUP
F/F	BISTABLE CIRCUIT (FLIP-FLOP)
F/O	MONOSTABLE CIRCUIT (FLIP-ZERO)

TABLE A

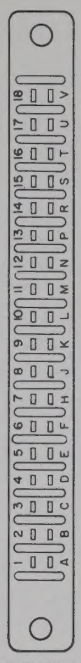

J19 THRU J23
WIRING SIDE

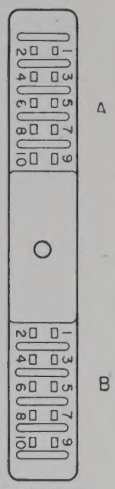

J5 THRU J17
J24 THRU J30
J44 THRU J56
WIRING SIDE

HIGHEST REFERENCE DESIGNATIONS		
C17	CR46	R89
REFERENCE DESIGNATIONS NOT USED		
C9, C10, C11, R20, R37 THRU R52 INCL		

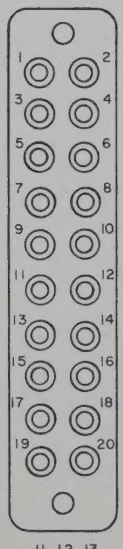

J1, J2, J3
WIRING SIDE

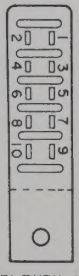

J31 THRU J43
WIRING SIDE

TM5840-219-35-C4-11

Figure 163.1.

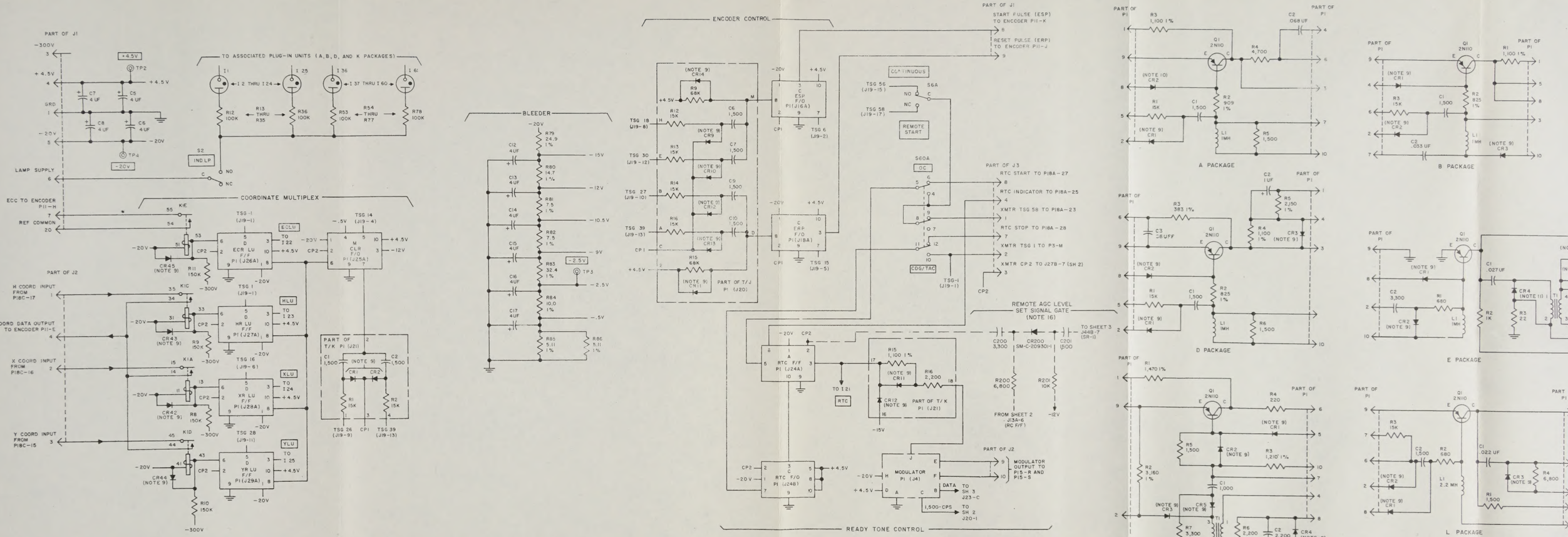

Figure 163.1. (Superseded) *Coordinate data transmitter unit T-721/TSQ-36, schematic diagram (part 1 of 3).*

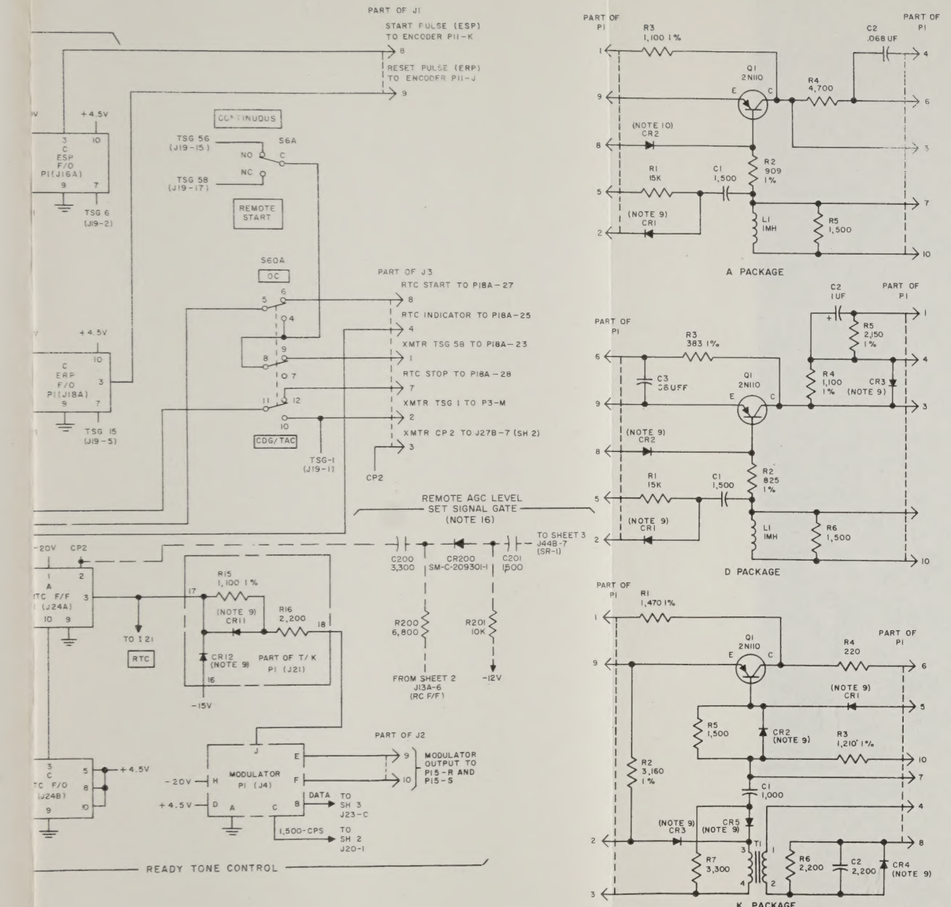

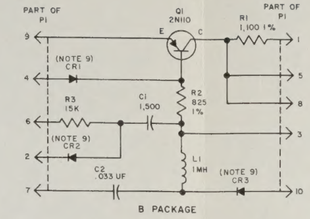

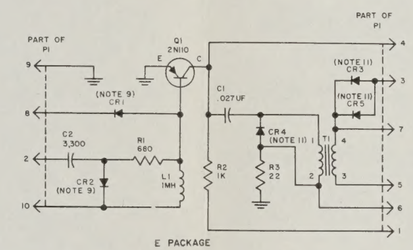

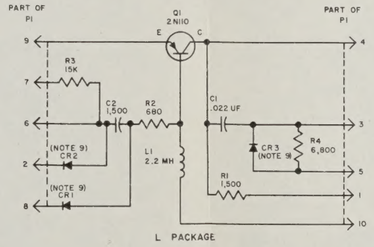

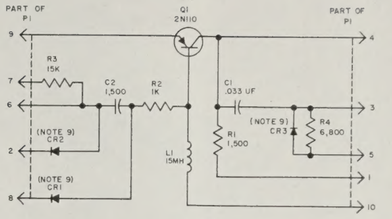

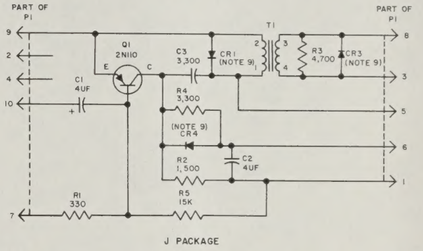

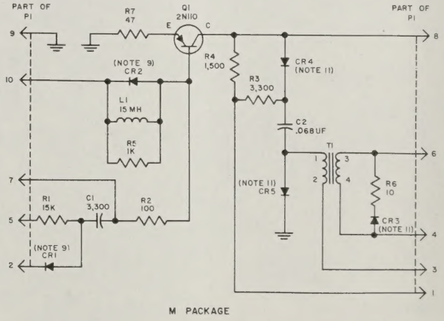

NOTES:

1. UNLESS OTHERWISE INDICATED, RESISTANCES ARE IN OHMS, CAPACITANCES ARE IN UUF.
2. UNLESS OTHERWISE INDICATED, RESISTORS ARE ±5% TOLERANCE.
3. TERMINAL NUMBERING FOR SWITCHES S10, S11, S60A, AND S60B IS FOR REFERENCE ONLY. RELATIVE LOCATION OF TERMINALS IS SHOWN IN DIAGRAM BELOW.

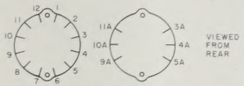

4. ENCLOSURES DESIGNATED A, B, TJ, TK ETC. REPRESENT PLUG-IN UNITS. THE J NUMBER ASSOCIATED WITH P1 IN THE ENCLOSURES IS THE DESIGNATION OF THE MATING PANEL CONNECTOR. THE NUMBERS ASSOCIATED WITH LEADS ENTERING THE ENCLOSURE ARE THE PLUG AND CONNECTOR TERMINALS.
5. NONFUNCTIONAL PLUG-IN UNITS MAY APPEAR IN SEVERAL ENCLOSURES FOR CIRCUIT LAYOUT CONVENIENCE. TERMINALS ARE REPEATED IN THESE ENCLOSURES WHERE NECESSARY TO FACILITATE CIRCUIT READABILITY.
6. THE FUNCTIONAL DESIGNATIONS ASSOCIATED WITH THE LAMP CONNECTIONS AT THE UNIT RING, TENS RING, BINARY COUNTER, AND SHIFT REGISTER STAGES INDICATE STAGE NUMBERS OF

THE UNITS RING, TENS RING, BINARY COUNTER, AND SHIFT REGISTER RESPECTIVELY.

7. FUNCTIONAL PACKAGE DESIGNATIONS ARE EXPLAINED IN TABLE A.
8. ☐ INDICATES EQUIPMENT MARKING.
9. DIODE PER SM-B-181088.
10. DIODE PER SM-B-181094.
11. DIODE PER SM-B-181092.
12. TRANSISTOR PER SM-B-182553.
13. IN OA-1425A/FSG-1 AND 1030 OC-CDG/TAC SWITCH S60 MUST REMAIN IN THE CDG/TAC POSITION.
14. AUXILIARY DIGITS 11 AND 12 ARE NOT USED IN OA-1425A/FSG-1 AND 1030
15. PLUG P18 IS DESIGNATED P1 IN ALL AN/MSQ-18 SYSTEM MANUALS
16. USED IN 1033 TRANSMITTER GROUP ONLY.

ABBREVIATION	FUNCTIONAL DESIGNATION
ACK	ACKNOWLEDGE
BC 1-13	BINARY COUNTERS
CLR	COORDINATE RELAY LOCKUP RELEASE
CO	CONTINUOUS
CP1 AND 2	CLOCK PULSE GENERATOR
ECR	EARTH CURVATURE CORRECTION RELAY
ERP	ENCODER RESET PULSE
ESP	ENCODER START PULSE
HR	H COORDINATE RELAY
PC	PULSE CONTROL
PFD	PULSE FREQUENCY DIVIDER
PH	H COORDINATE PARALLAX
PX	X COORDINATE PARALLAX
PY	Y COORDINATE PARALLAX
RS	REMOTE START
RT	PROGRAMMER RESET CONTROL
RTC	READY TONE CONTROL
SP	SINGLE PULSE GENERATOR
SR 1-13	SHIFT REGISTER
SRC	SHIFT REGISTER CONTROL
SZ	SHIFT REGISTER SET ZERO PULSE
TC	RECYCLE TEST CONTROL
TR 00-50	TENS RING
TRR	TENS RING RESET PULSE GENERATOR
UR 0-9	UNITS RING
URR	UNITS RING RESET PULSE GENERATOR
XR	X COORDINATE RELAY
YR	Y COORDINATE RELAY
LU	LOCKUP
F/F	BISTABLE CIRCUIT (FLIP-FLOP)
F/O	MONOSTABLE CIRCUIT (FLIP-ZERO)

TABLE A

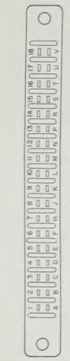

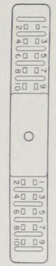

HIGHEST REFERENCE DESIGNATIONS
C17 CR46 R89
REFERENCE DESIGNATIONS NOT USED
C9, C10, C11, R20, R37 THRU R52 INCL

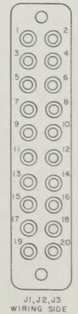

TM5840-219-35-C4-11

Figure 163.1. (Superseded) *Coordinate data transmitter unit T-721/TSQ-36, schematic diagram (part 1 of 3).*

Figure 163.1.

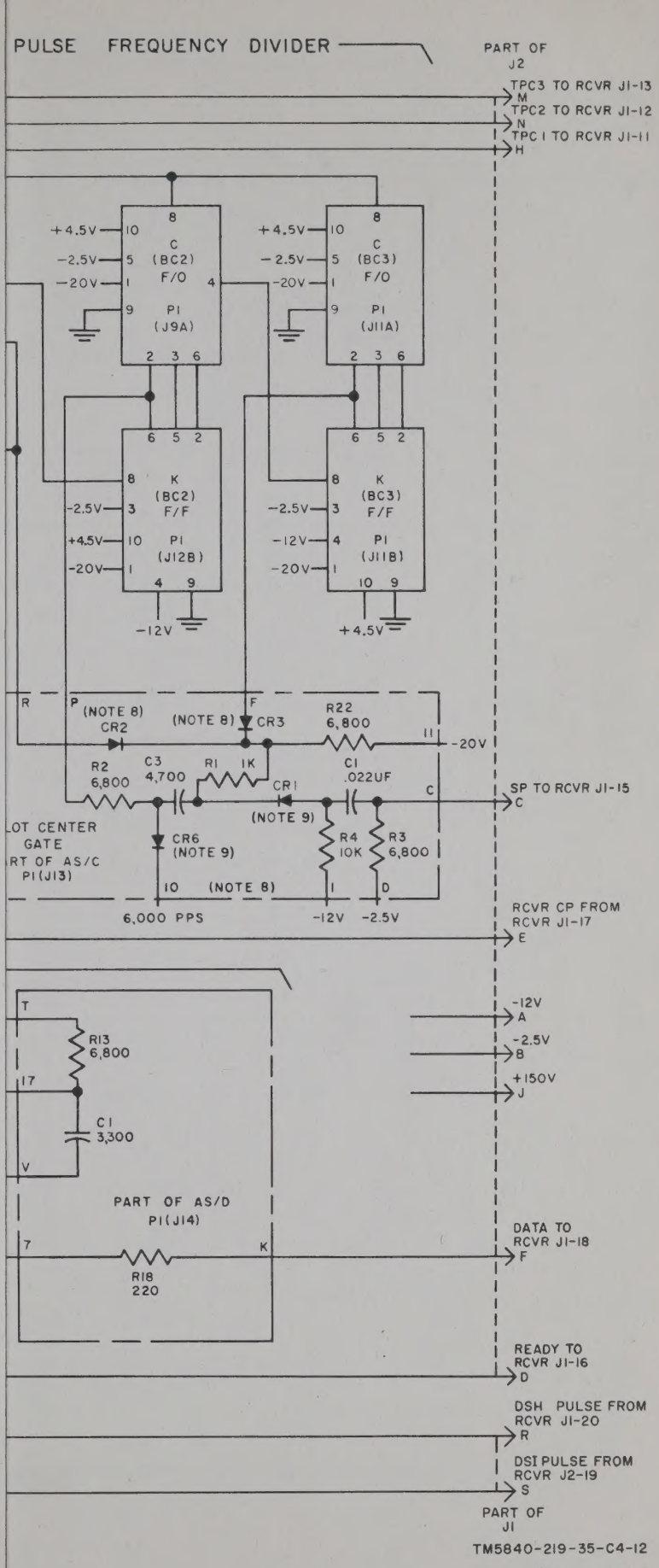
PULSE FREQUENCY DIVIDER
PART OF J2
TPC3 TO RCVR J1-13 M
TPC2 TO RCVR J1-12 N
TPC1 TO RCVR J1-11 H
+4.5V
-2.5V
-20V
C (BC2) F/O
P1 (J9A)
C (BC3) F/O
P1 (J11A)
K (BC2) F/F
P1 (J12B)
K (BC3) F/F
P1 (J11B)
-12V
+4.5V
(NOTE 8)
CR2
CR3
R22 6,800
R2 6,800
C3 4,700
R1 1K
C1 .022UF
CR1
(NOTE 9)
SP TO RCVR J1-15 C
CR6 (NOTE 9)
R4 10K
R3 6,800
6,000 PPS
RCVR CP FROM RCVR J1-17 E
R13 6,800
C1 3,300
PART OF AS/D P1(J14)
R18 220
-12V A
-2.5V B
+150V J
DATA TO RCVR J1-18 F
READY TO RCVR J1-16 D
DSH PULSE FROM RCVR J1-20 R
DSI PULSE FROM RCVR J2-19 S
PART OF J1
TM5840-219-35-C4-12

Figure 170.2.

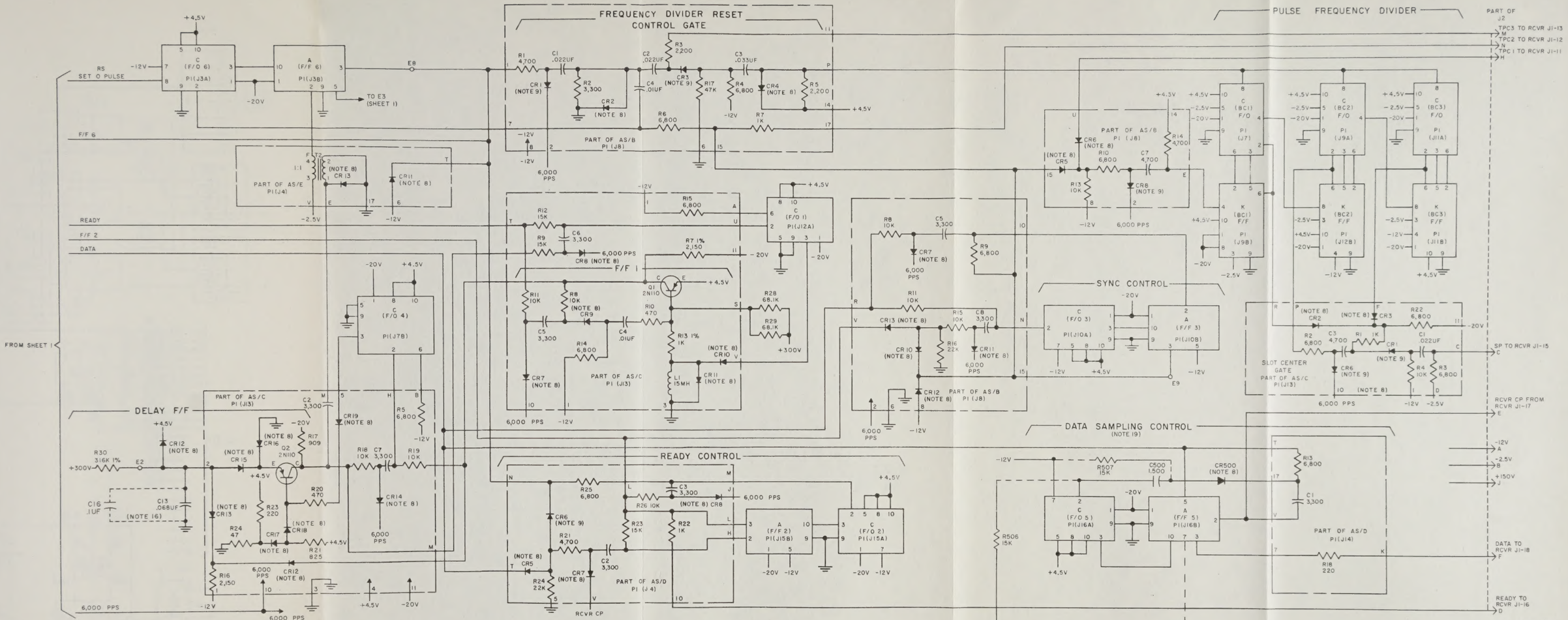

Figure 170.2. Amplifier-synchronizer units AM–2126/TSQ–36, AM–2450/FSG–1, and 1034, schematic diagram (part 2 of 2).

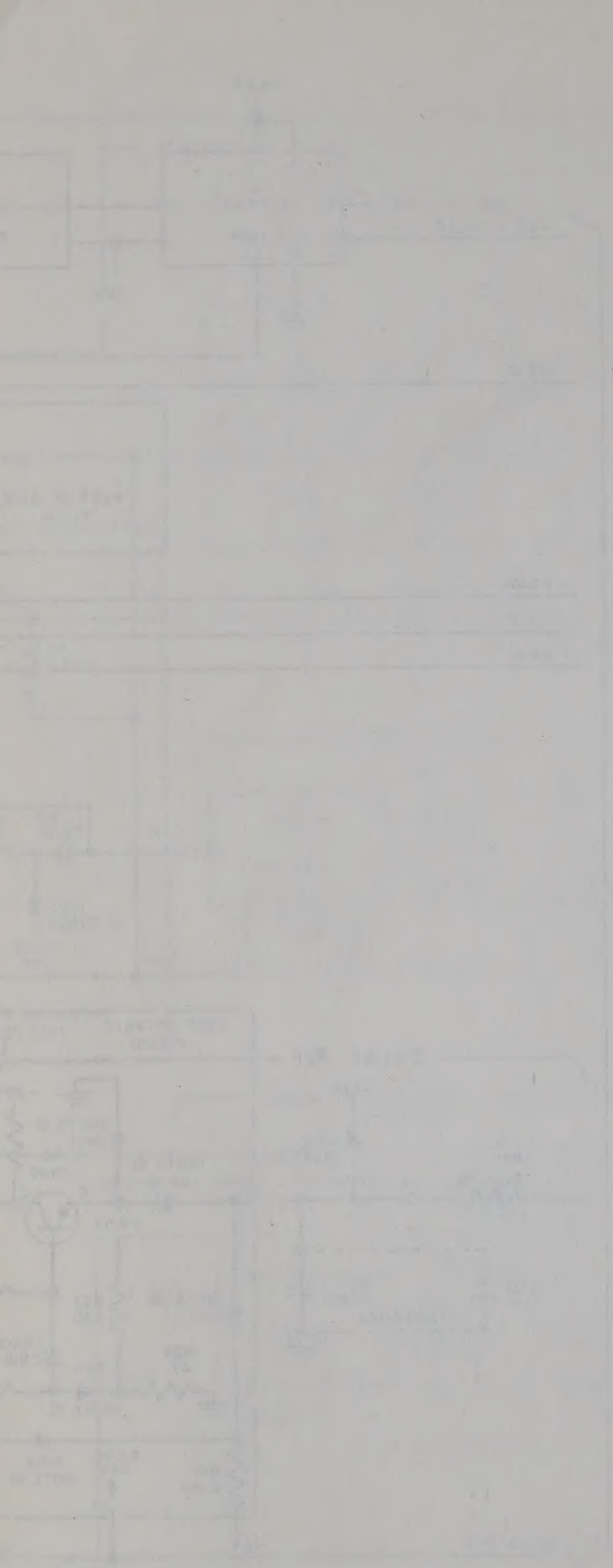

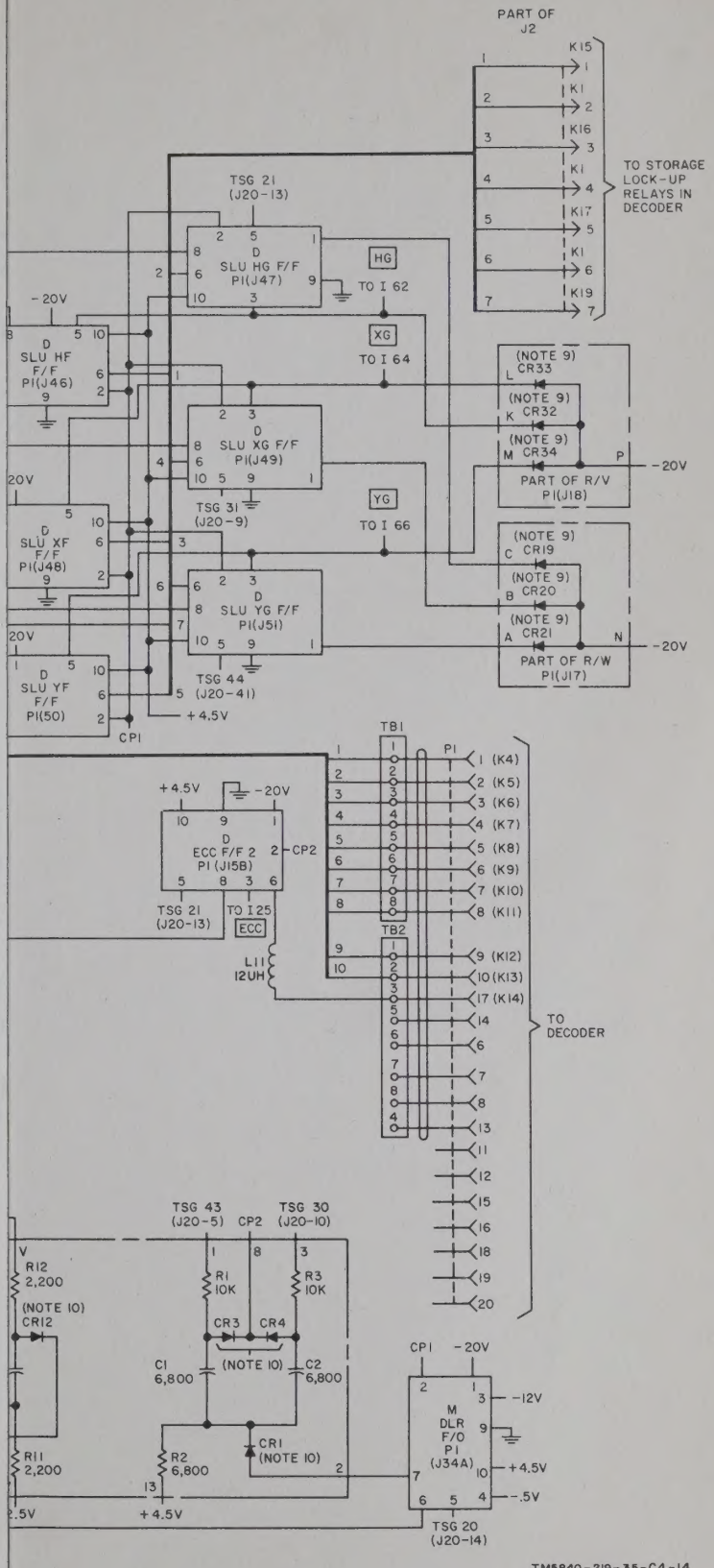

TM5840-219-35-C4-14

Figure 172.3.

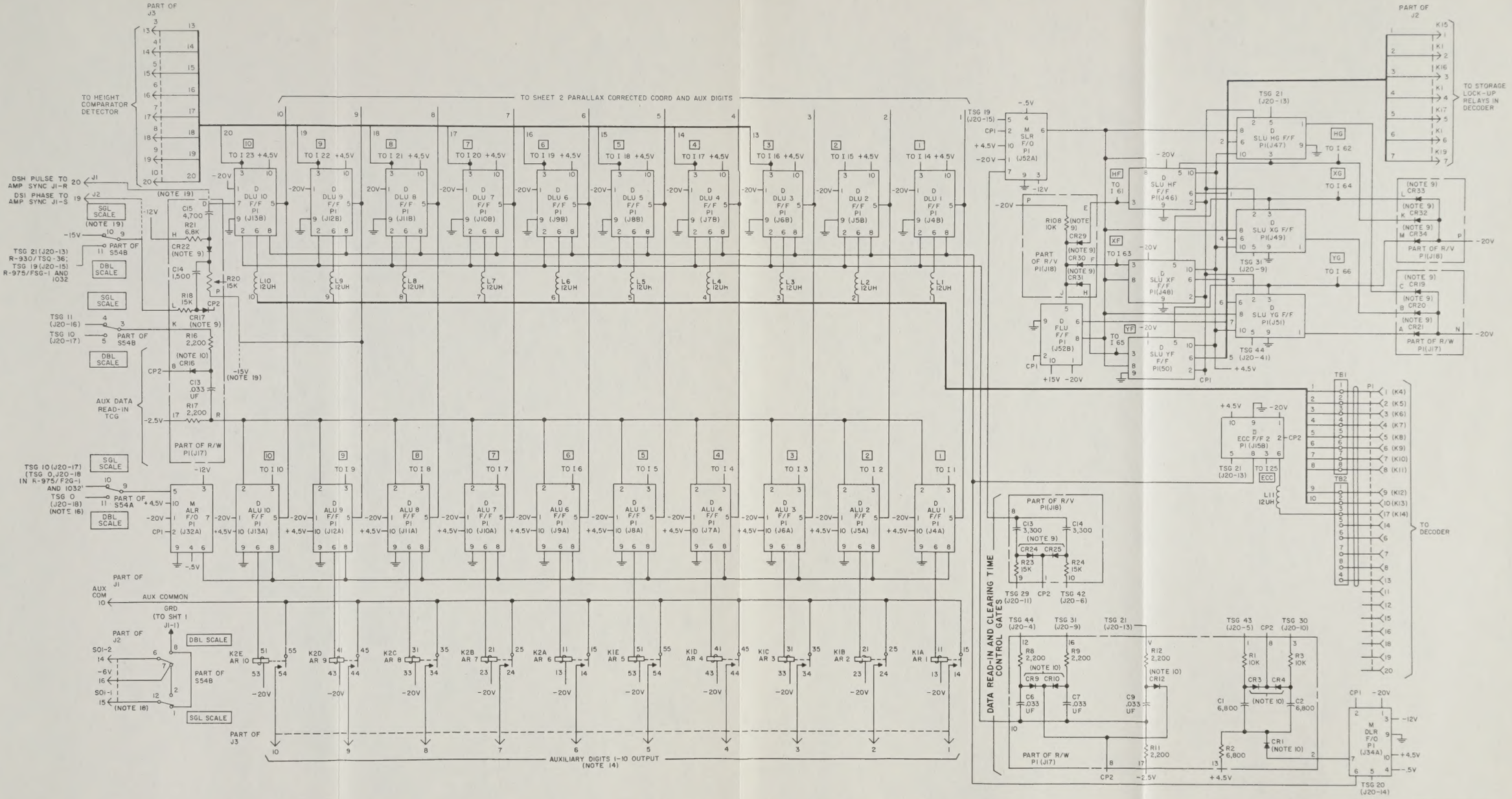
TO HEIGHT COMPARATOR DETECTOR
PART OF J3
TO SHEET 2 PARALLAX CORRECTED COORD AND AUX DIGITS
DSH PULSE TO AMP SYNC J1-R
DSI PHASE TO AMP SYNC J1-S
TSG 21 (J20-13) R-930/TSQ-36; TSG 19 (J20-15) R-975/FSG-1 AND 1032
TSG 11 (J20-16)
TSG 10 (J20-17)
TSG 10 (J20-17) (TSG 0, J20-18 IN R-975/FSG-1 AND 1032)
TSG 0 (J20-18) (NOTE 16)
AUX DATA READ-IN TCG
AUX COMMON
GRD (TO SHT 1 J1-1)
PART OF J1
PART OF J2
PART OF S54B
PART OF R/W P1 (J17)
PART OF R/V P1 (J18)
AUXILIARY DIGITS 1-10 OUTPUT (NOTE 14)
DATA READ-IN AND CLEARING TIME CONTROL GATES
TO STORAGE LOCK-UP RELAYS IN DECODER
TO DECODER
TSG 19 (J20-15)
TSG 21 (J20-13)
TSG 31 (J20-9)
TSG 44 (J20-4)
TSG 43 (J20-5)
TSG 30 (J20-10)
TSG 29 (J20-11)
TSG 42 (J20-6)
TSG 20 (J20-14)
TM5840-219-35-C4-14

Figure 172.3. (Superseded) *Coordinate data receiver units R-930/TSQ-36, R-975/FSG-1, and 1032, schematic diagram (part 3 of 3).*

Figure 172.3.

Figure 172 (fold-out in separate envelope). Make the following changes:

Change the caption (page 21 of C2) to: *Coordinate data receiver units R–930/TSQ–36, R–975/FSG–1, and 1032, schematic diagram (part 1 of 3).*

Part 1. Make the following changes:

Notes 12 (page 1 of C2) and 14 (page 21 of C2). Change "RECEIVER UNIT R–975/FSG–1" to: RECEIVER UNITS R–975/FSG–1 AND 1032.

Note 13 (page 1 of C2). After OA–1425A/FSG–1." Add: AND 1030.

Add notes 16, 17, 18, and 19.

16. IN RECEIVER UNITS R–975/FSG–1 AND 1032, TSG 0 IS APPLIED TO BOTH INPUTS OF S54A.

17. IN RECEIVER UNIT 1032, J16B–9 IS NOT CONNECTED DIRECTLY TO GROUND. GROUND IS SUPPLIED FROM DATA CONVERTER 1021 TM 11–5895–287–35 AND TM 11–5895–287–12 (WSM 024 AND WSM 048 RESPECTIVELY).

18. IN RECEIVER UNIT 1032, J2–15 IS DISCONNECTED FROM S54B–12 AND CONNECTED TO J16B–9.

19. IN RECEIVER UNITS R–975/FSG–1 AND 1032: S54B–9 ALSO CONNECTS TO J2–19; DASHED LINE CIRCUITRY ONLY AT J17–D AND J17–P ARE USED. IN RECEIVER UNIT R–930/TSQ–36 SOLID LINE CIRCUITRY ONLY AT S54B–9, J17–D, AND J17–P ARE USED!

Part 2. At the lower left, add a dashed line extending from terminal 9 of the OSD F/F to the left side of the illustration terminating with a male jack connector symbol. Label the jack symbol as pin 15 and identify it as "PART OF J2." Add destination information as follows: ADP PULSE GENERATOR RETURN (GRD) (NOTE 17).

Part 3. Delete part 3 and substitute the new part 3 of 3.

Figure 172.3. (Superseded) *Coordinate data receiver units R–930/TSQ–36, R–975/FSG–1, and 1032, schematic diagram (part 3 of 3).*
(Located in back of manual)

Figures 180 (fold-out in separate envelope) and 180.1 (fold-out in C2). Make the following changes:

At station 1, change "5 BLK" to: 6 BLK.

At station 6, change "3 WHT-BLK-GY" to "5 WHT-BLK-GY;" change "5 WHT-YEL-GY" to: 3 WHT-YEL-GY.

At AT1 and AT2 (above station 6), add the number "1" at the "IN" terminal; add the number "2" at the "C" terminal; add the number "3" at the "OUT" terminal.

Figure 182 (fold-out in separate envelope). Make the following changes:

At station 4, add the color "BLU" to the wire numbered "6" that connects XVI–2.

At station 6, add the color "BLU" to the wire numbered "4" that connects to J1–J.

Page 343, figure 196 (fold-out in separate envelope). In the "HIGHEST REFERENCE DESIGNATIONS" block, change CR12" to: CR13.

Page 376, glossary. After the entry for "DSA." Add:

DSH.....Double scale height
DSI.....Double scale inhibit

BY ORDER OF THE SECRETARY OF THE ARMY:

G. H. DECKER,
General, United States Army,
Chief of Staff.

Official:

J. C. LAMBERT,
Major General, United States Army,
The Adjutant General.

Distribution:

To be distributed in accordance with DA Form 12–32, Section III (Unclas) requirements for Nike-Ajax, Nike-Hercules and Pershing—TM—Radar.

☆ U. S. GOVERNMENT PRINTING OFFICE: 1962—650502